http://laptopblue.vn/

Desert Eagle
LA-3161P

# Compal confidential

## HEL80/HEL81 Schematics Document

## Mobile Yonah uFCPGA with Intel Calistoga_GM/PM+ICH7-M

Thursday, February 23, 2006

REV:0.3

| Security Classification | Compal Secret Data | | |
|---|---|---|---|
| Issued Date | 2005/10/06 | Deciphered Date | 2006/10/06 |

THIS SHEET OF ENGINEERING DRAWING IS THE PROPRIETARY PROPERTY OF COMPAL ELECTRONICS, INC. AND CONTAINS CONFIDENTIAL AND TRADE SECRET INFORMATION. THIS SHEET MAY NOT BE TRANSFERRED FROM THE CUSTODY OF THE COMPETENT DIVISION OF R&D DEPARTMENT EXCEPT AS AUTHORIZED BY COMPAL ELECTRONICS, INC. NEITHER THIS SHEET NOR THE INFORMATION IT CONTAINS MAY BE USED BY OR DISCLOSED TO ANY THIRD PARTY WITHOUT PRIOR WRITTEN CONSENT OF COMPAL ELECTRONICS, INC.

Compal Electronics, Inc.

Title: Cover Sheet

Size: Custom | Document Number: HEL80 LA-3161P | Rev: 0.3

Date: | Sheet 1 of 43

http://laptopblue.vn/

# Compal Confidential

**Model Name : HEL80**
**File Name : LA-3161P**

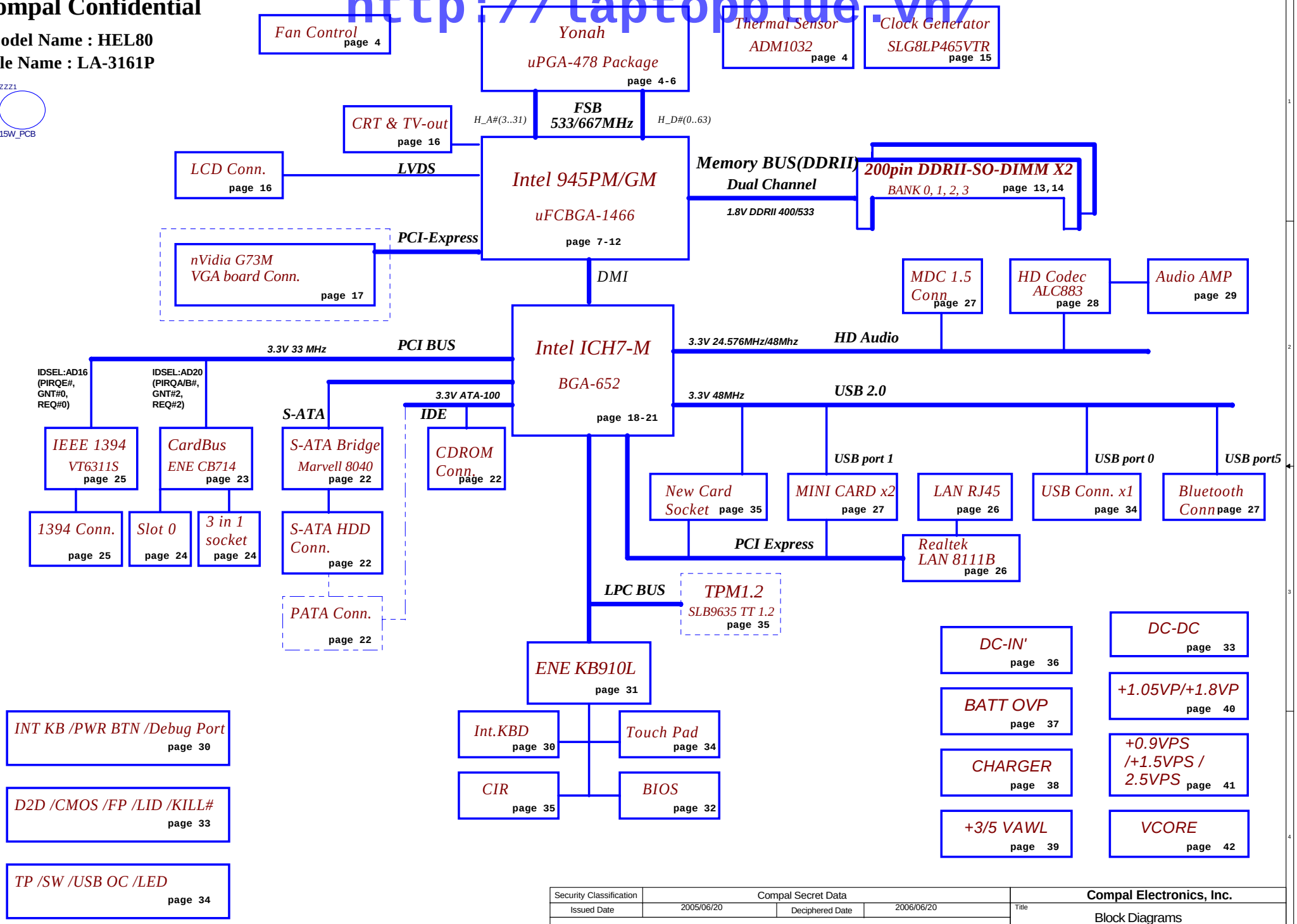


| Security Classification | Compal Secret Data | | |
|---|---|---|---|
| Issued Date | 2005/06/20 | Deciphered Date | 2006/06/20 |

THIS SHEET OF ENGINEERING DRAWING IS THE PROPRIETARY PROPERTY OF COMPAL ELECTRONICS, INC. AND CONTAINS CONFIDENTIAL AND TRADE SECRET INFORMATION. THIS SHEET MAY NOT BE TRANSFERED FROM THE CUSTODY OF THE COMPETENT DIVISION OF R&D DEPARTMENT EXCEPT AS AUTHORIZED BY COMPAL ELECTRONICS, INC. NEITHER THIS SHEET NOR THE INFORMATION IT CONTAINS MAY BE USED BY OR DISCLOSED TO ANY THIRD PARTY WITHOUT PRIOR WRITTEN CONSENT OF COMPAL ELECTRONICS, INC.

**Compal Electronics, Inc.**

Title: Block Diagrams

Size: Custom | Document Number: HEL80 LA-3161P | Rev: 0.2

Date: Thursday, February 23, 2006 | Sheet 2 of 43

http://laptopblue.vn/

## Voltage Rails

| State \ power plane | +B<br>LDO3<br>LDO5 | +5VALW<br>+3VALW | +1.8V<br>+5V | +5VS<br>+3VS<br>+2.5VS<br>+1.8VS<br>+1.5VS<br>+1.2VS<br>+VGA_CORE<br>+0.9VS<br>+CPU_CORE<br>+VCCP |
|---|---|---|---|---|
| S0 | O | O | O | O |
| S1 | O | O | O | O |
| S3 | O | O | O | X |
| S5 S4/AC | O | O | X | X |
| S5 S4/ Battery only | O | X | X | X |
| S5 S4/AC & Battery don't exist | X | X | X | X |

O MEANS ON
X MEANS OFF

S3 : STR
S4 : STD
S5 : SOFT OFF

## SKU ID Table

| | |
|---|---|
| Vcc | 3.3V +/- 5% |
| Ra | 100K +/- 5% |

| Board ID | Rb | VAD_BID min | VAD_BID typ | VAD_BID max |
|---|---|---|---|---|
| 0 | 0 | 0 V | 0 V | 0 V |
| 1 | 8.2K +/- 5% | 0.216 V | 0.250 V | 0.289 V |
| 2 | 18K +/- 5% | 0.436 V | 0.503 V | 0.538 V |
| 3 | 33K +/- 5% | 0.712 V | 0.819 V | 0.875 V |
| 4 | 56K +/- 5% | 1.036 V | 1.185 V | 1.264 V |
| 5 | 100K +/- 5% | 1.453 V | 1.650 V | 1.759 V |
| 6 | 200K +/- 5% | 1.935 V | 2.200 V | 2.341 V |
| 7 | NC | 2.500 V | 3.300 V | 3.300 V |

| SKU ID | HEL80/81 SKU |
|---|---|
| * 0 | HEL80 SKU |
| 1 | HEL81 SKU |
| 2 | TEST MODE |
| 3 | |
| 4 | |
| 5 | |
| 6 | |
| 7 | |

## BOM Structure

| MARK | FUNCTION |
|---|---|
| @ | NC FOR ALL |
| UMA@ | Internal 945GM |
| VGA@ | External G7xM |
| TPM@ | TPM1.2 |
| CIR@ | CIR |
| 1394@ | 1394 |
| SATA@ | SATA HDD |
| 8040@ | PATA HDD |
| IOMP@ | IOMP |
| 15W@ | 15W PANEL |
| APA@ | HP out from AMP |
| HPA@ | HP out from HP AMP |
| HP@ | HP out from CODEC |

## USB PORT LIST

| PORT | DEVICE |
|---|---|
| 0 | LEFT SIDE |
| 1 | BLUE TOOTH |
| 2 | RIGHT SIDE |
| 3 | CMOS |
| 4 | RIGHT SIDE |
| 5 | FINGER PRINTER |
| 6 | NEW CARD |
| 7 | TV |

## External PCI Devices

| Device | IDSEL# | REQ#/GNT# | Interrupts |
|---|---|---|---|
| CardBus | AD20 | 2 | PIRQA/B |
| 1394 | AD16 | 0 | PIRQE |

## EC SM Bus1 address

| Device | Address |
|---|---|
| Smart Battery | 0001 011X b |
| EEPROM(24C16/02) | 1010 000X b |

## EC SM Bus2 address

| Device | Address |
|---|---|
| ADM1032 | 1001 100X b |

## ICH7 SM Bus address

| Device | Address |
|---|---|
| Clock Generator (SLG8LP465VTR) | 1101 001Xb |
| DDRII DIMM0 | 1010 000Xb |
| DDRII DIMM1 | 1010 010Xb |

| | | |
|---|---|---|
| +3VALW | KB910L<br>SB<br>RTL8110SBL/CL | mA<br>160mA |
| +CPU_CORE | CPU | 36A |
| +VCCP | CPU<br>NB | 2.5A<br>9.8A<br>(14.7A) |
| +5VS | EXPRESS CARD<br>HDD<br>ODD<br>MDC<br>APA2066<br>TPA0211<br>AD1986<br>USB PORT * 6 | 1A<br>1.5A<br>1.8A<br>300mA<br>1A<br>mA<br>70mA<br>3A |
| +3VS | NB<br>EXPRESS CARD<br>CLK_GEN<br>LCDVCC<br>VGA CARD (G7XM)<br>SB<br>R5C832<br>BIOS ROM<br>KB910L<br>CB1410 | 480mA<br>1A<br>200mA<br>1A<br>655mA<br>680mA<br>mA<br>15mA<br>200mA<br>mA |
| +2.5VS | VGA CARD (G7XM)<br>NB | 130mA<br>(143mA) |
| +1.8V | DDR2_DIMM<br>NB (667Mhz) | 8A<br>3.1A |
| +1.8VS | GDDR2<br>VGA CARD (G7XM) | 6A<br>4.06A |
| +0.9VREF | DDR2_DIMM | 10mA |
| +0.9VS | GDDR2<br>DDR2_DIMM | 1A<br>2A |
| +1.5V | SB | 40mA |
| +1.5VS | NB<br>SB<br>MiniCard<br>EXPRESS CARD<br>VGA CARD (G7XM) | 8.9A(13.8A)<br>3.8A<br>1A<br>0.65A<br>2A |

| | | | |
|---|---|---|---|
| Security Classification | Compal Secret Data | | |
| Issued Date | 2005/10/06 | Deciphered Date | 2006/10/06 |

THIS SHEET OF ENGINEERING DRAWING IS THE PROPRIETARY PROPERTY OF COMPAL ELECTRONICS, INC. AND CONTAINS CONFIDENTIAL AND TRADE SECRET INFORMATION. THIS SHEET MAY NOT BE TRANSFERED FROM THE CUSTODY OF THE COMPETENT DIVISION OF R&D DEPARTMENT EXCEPT AS AUTHORIZED BY COMPAL ELECTRONICS, INC. NEITHER THIS SHEET NOR THE INFORMATION IT CONTAINS MAY BE USED BY OR DISCLOSED TO ANY THIRD PARTY WITHOUT PRIOR WRITTEN CONSENT OF COMPAL ELECTRONICS, INC.

Compal Electronics, Inc.

Title: Notes List

Size: Custom | Document Number: HEL80 LA-3161P | Rev: 0.2

Date: Thursday, February 23, 2006 | Sheet 3 of 43

http://laptopblue.vn/

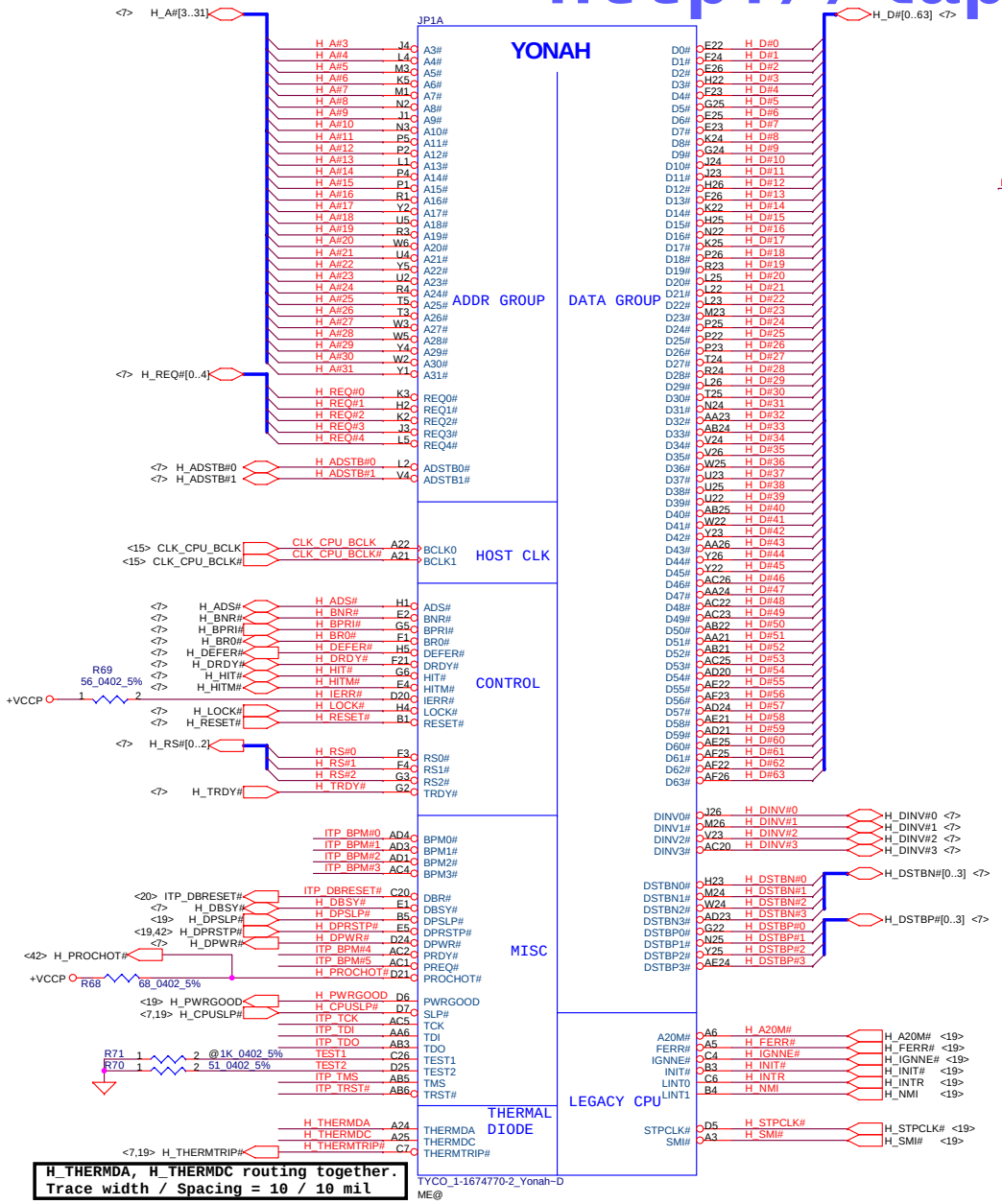


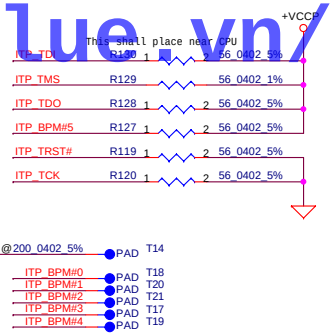


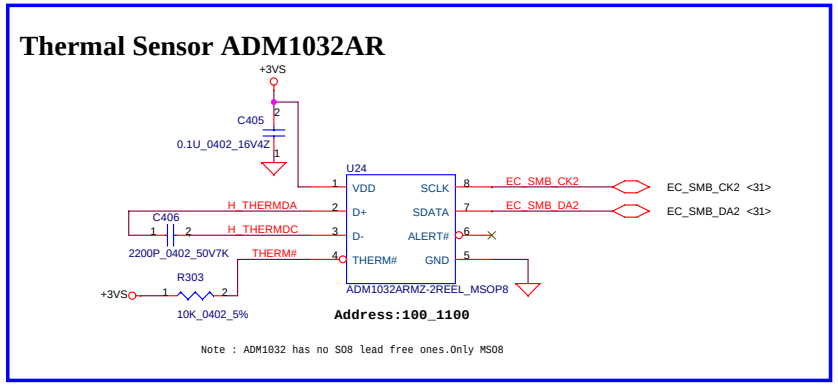


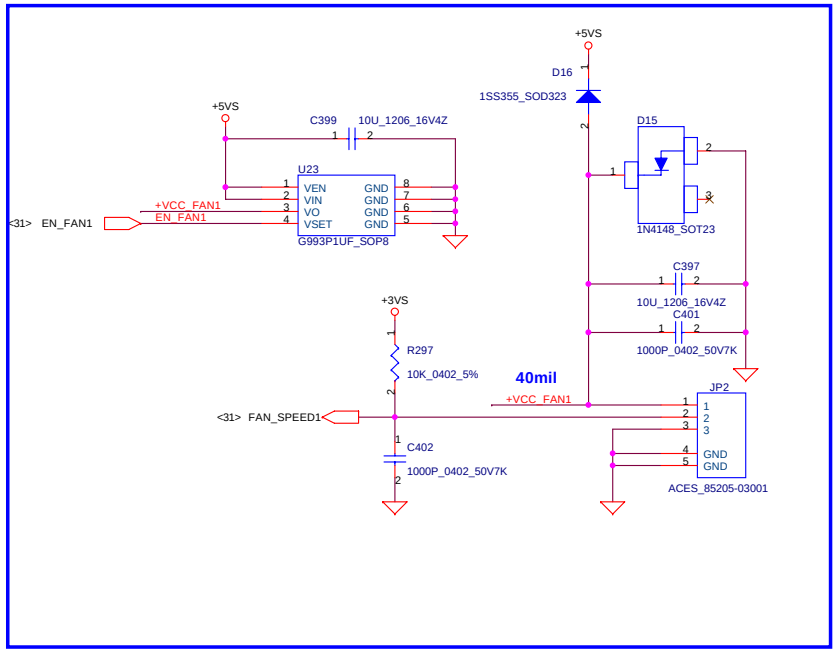


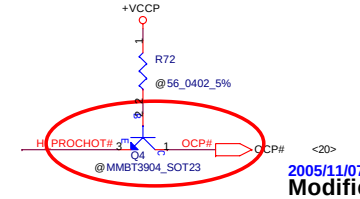


**H_THERMDA, H_THERMDC routing together.**
**Trace width / Spacing = 10 / 10 mil**

2005/11/07
**Modified Q4 part number to SB039040000.**

| Security Classification | Compal Secret Data | | |
|---|---|---|---|
| Issued Date | 2005/10/06 | Deciphered Date | 2006/10/06 |

THIS SHEET OF ENGINEERING DRAWING IS THE PROPRIETARY PROPERTY OF COMPAL ELECTRONICS, INC. AND CONTAINS CONFIDENTIAL AND TRADE SECRET INFORMATION. THIS SHEET MAY NOT BE TRANSFERED FROM THE CUSTODY OF THE COMPETENT DIVISION OF R&D DEPARTMENT EXCEPT AS AUTHORIZED BY COMPAL ELECTRONICS, INC. NEITHER THIS SHEET NOR THE INFORMATION IT CONTAINS MAY BE USED BY OR DISCLOSED TO ANY THIRD PARTY WITHOUT PRIOR WRITTEN CONSENT OF COMPAL ELECTRONICS, INC.

**Compal Electronics, Inc.**

Title: **Yonah CPU in mFCPGA479**

Size: Custom | Document Number: **HEL80 LA-3161P** | Rev: 0.2

Date: Thursday, February 23, 2006 | Sheet 4 of 43

http://laptopblue.vn/

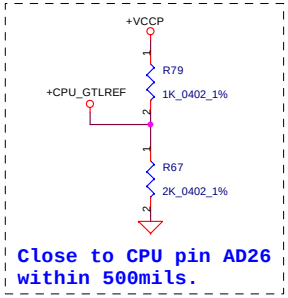


Trace / Width = 4 / 25 mils

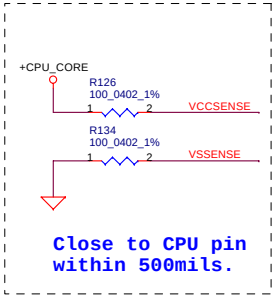


Trace / Width = 18 / 50 mils

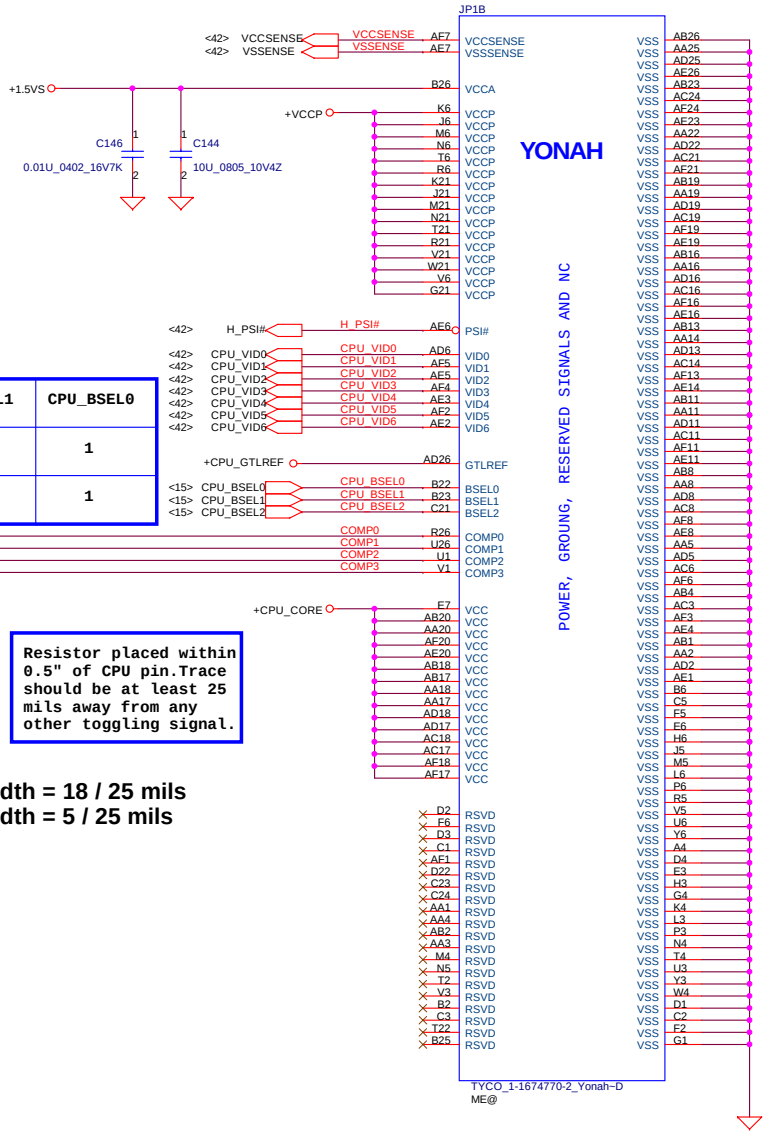


| CPU_BSEL | CPU_BSEL2 | CPU_BSEL1 | CPU_BSEL0 |
|---|---|---|---|
| 133 | 0 | 0 | 1 |
| 166 | 0 | 1 | 1 |

Resistor placed within 0.5" of CPU pin.Trace should be at least 25 mils away from any other toggling signal.

COMP 0/2Trace / Width = 18 / 25 mils
COMP 1/3Trace / Width = 5 / 25 mils

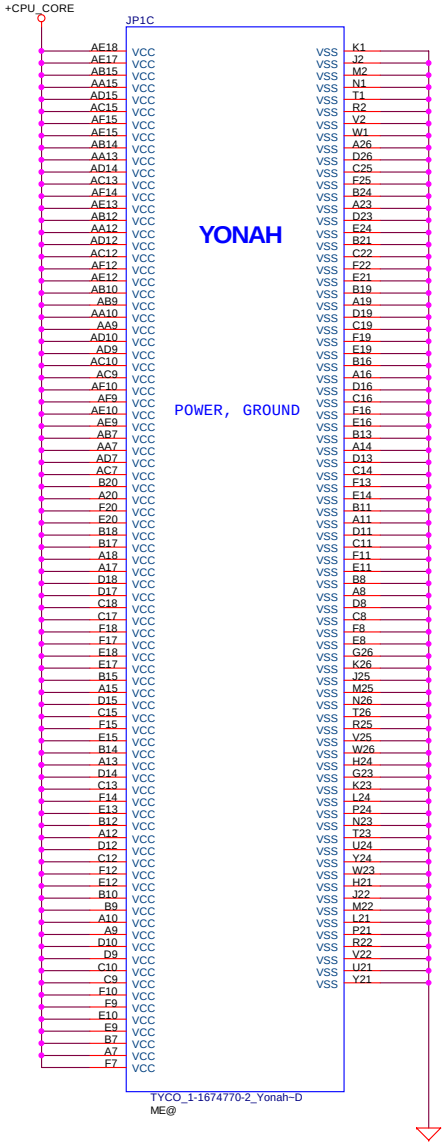


| Security Classification | Compal Secret Data | | |
|---|---|---|---|
| Issued Date | 2005/10/06 | Deciphered Date | 2006/10/06 |

THIS SHEET OF ENGINEERING DRAWING IS THE PROPRIETARY PROPERTY OF COMPAL ELECTRONICS, INC. AND CONTAINS CONFIDENTIAL AND TRADE SECRET INFORMATION. THIS SHEET MAY NOT BE TRANSFERED FROM THE CUSTODY OF THE COMPETENT DIVISION OF R&D DEPARTMENT EXCEPT AS AUTHORIZED BY COMPAL ELECTRONICS, INC. NEITHER THIS SHEET NOR THE INFORMATION IT CONTAINS MAY BE USED BY OR DISCLOSED TO ANY THIRD PARTY WITHOUT PRIOR WRITTEN CONSENT OF COMPAL ELECTRONICS, INC.

**Compal Electronics, Inc.**

Title: **Yonah CPU in mFCPGA479**

Size: Custom | Document Number: **HEL80 LA-3161P** | Rev: 0.2

Date: Thursday, February 23, 2006 | Sheet 5 of 43

http://laptopblue.vn/

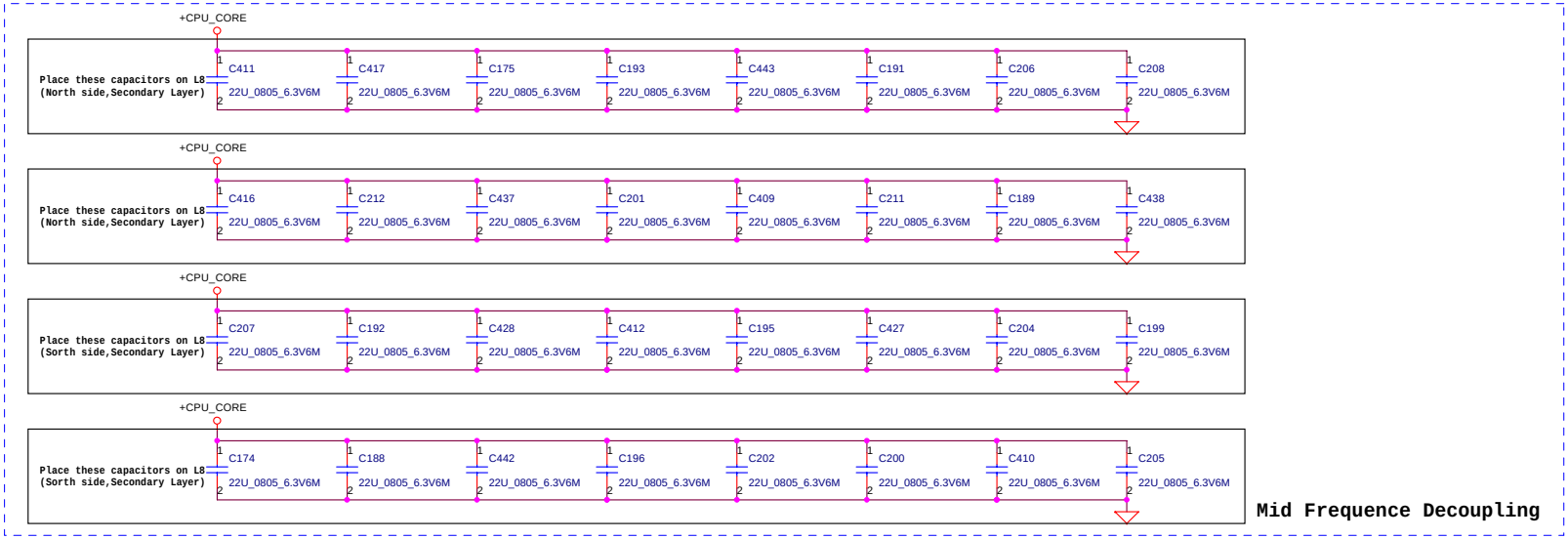


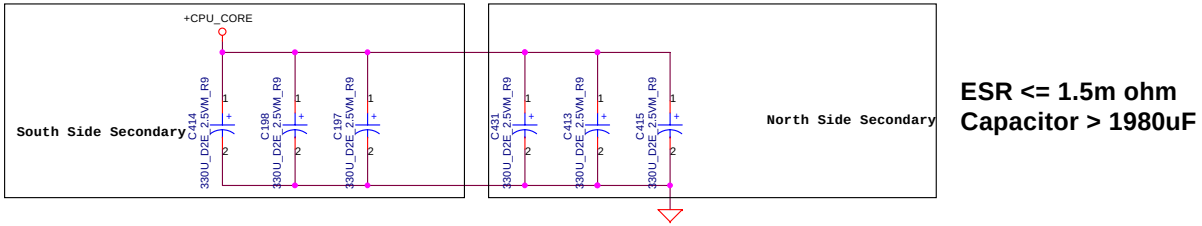


**ESR <= 1.5m ohm**
**Capacitor > 1980uF**

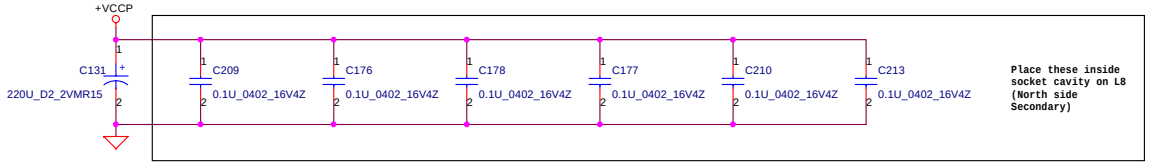


| | | | |
|---|---|---|---|
| Security Classification | Compal Secret Data | | |
| Issued Date | 2005/10/06 | Deciphered Date | 2006/10/06 |

THIS SHEET OF ENGINEERING DRAWING IS THE PROPRIETARY PROPERTY OF COMPAL ELECTRONICS, INC. AND CONTAINS CONFIDENTIAL AND TRADE SECRET INFORMATION. THIS SHEET MAY NOT BE TRANSFERED FROM THE CUSTODY OF THE COMPETENT DIVISION OF R&D DEPARTMENT EXCEPT AS AUTHORIZED BY COMPAL ELECTRONICS, INC. NEITHER THIS SHEET NOR THE INFORMATION IT CONTAINS MAY BE USED BY OR DISCLOSED TO ANY THIRD PARTY WITHOUT PRIOR WRITTEN CONSENT OF COMPAL ELECTRONICS, INC.

**Compal Electronics, Inc.**

Title: **CPU Bypass capacitors**

Size: Custom | Document Number: **HEL80 LA-3161P** | Rev: 0.2

Date: Thursday, February 23, 2006 | Sheet 6 of 43

Note : 2005/12/26 modify pn
PM : SA00000KDC0
GM : SA0000059H0

http://laptopblue.vn/

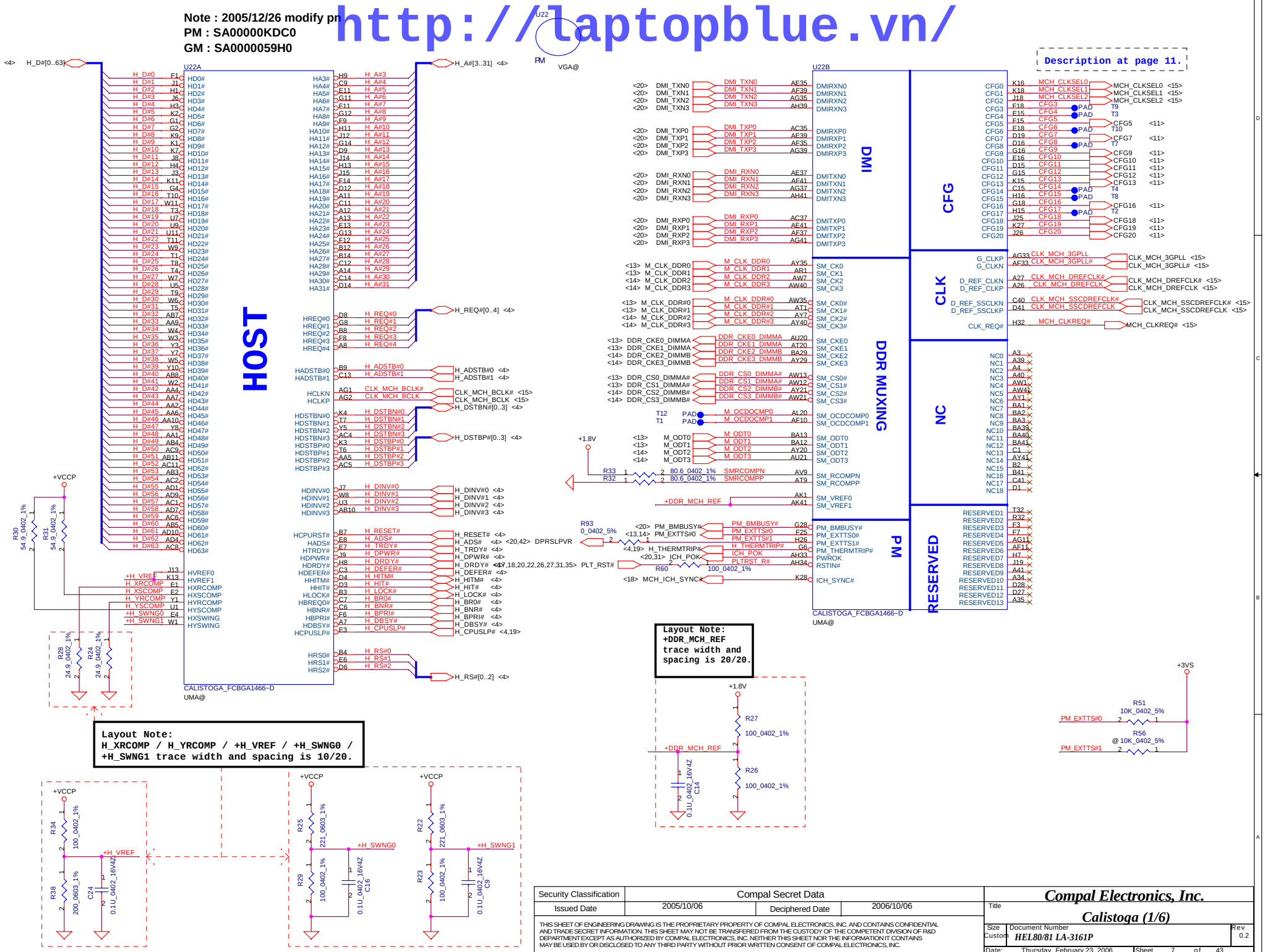


| Security Classification | Compal Secret Data | | |
|---|---|---|---|
| Issued Date | 2005/10/06 | Deciphered Date | 2006/10/06 |

THIS SHEET OF ENGINEERING DRAWING IS THE PROPRIETARY PROPERTY OF COMPAL ELECTRONICS, INC. AND CONTAINS CONFIDENTIAL AND TRADE SECRET INFORMATION. THIS SHEET MAY NOT BE TRANSFERRED FROM THE CUSTODY OF THE COMPETENT DIVISION OF R&D DEPARTMENT EXCEPT AS AUTHORIZED BY COMPAL ELECTRONICS, INC. NEITHER THIS SHEET NOR THE INFORMATION IT CONTAINS MAY BE USED BY OR DISCLOSED TO ANY THIRD PARTY WITHOUT PRIOR WRITTEN CONSENT OF COMPAL ELECTRONICS, INC.

Compal Electronics, Inc.

Title: Calistoga (1/6)

Size: Custom | Document Number: HEL80/81 LA-3161P | Rev: 0.2

Date: Thursday, February 23, 2006 | Sheet 7 of 43

http://laptopblue.vn/

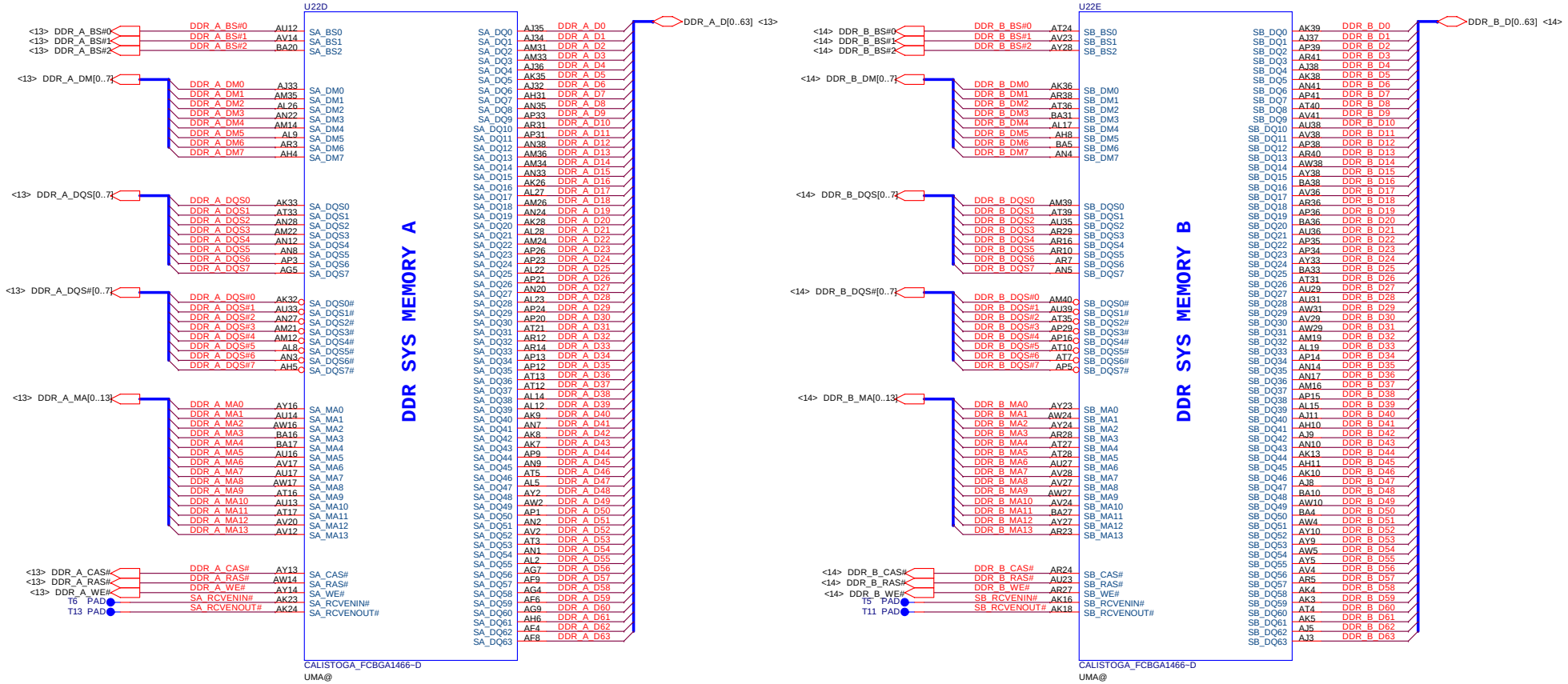


| Security Classification | Compal Secret Data | | |
|---|---|---|---|
| Issued Date | 2005/10/06 | Deciphered Date | 2006/10/06 |

THIS SHEET OF ENGINEERING DRAWING IS THE PROPRIETARY PROPERTY OF COMPAL ELECTRONICS, INC. AND CONTAINS CONFIDENTIAL AND TRADE SECRET INFORMATION. THIS SHEET MAY NOT BE TRANSFERRED FROM THE CUSTODY OF THE COMPETENT DIVISION OF R&D DEPARTMENT EXCEPT AS AUTHORIZED BY COMPAL ELECTRONICS, INC. NEITHER THIS SHEET NOR THE INFORMATION IT CONTAINS MAY BE USED BY OR DISCLOSED TO ANY THIRD PARTY WITHOUT PRIOR WRITTEN CONSENT OF COMPAL ELECTRONICS, INC.

**Compal Electronics, Inc.**

Title: **Calistoga (2/6)**

Size: Custom | Document Number: **HEL80/81 LA-3161P** | Rev: 0.2

Date: Thursday, February 23, 2006 | Sheet 8 of 43

http://laptopblue.vn/

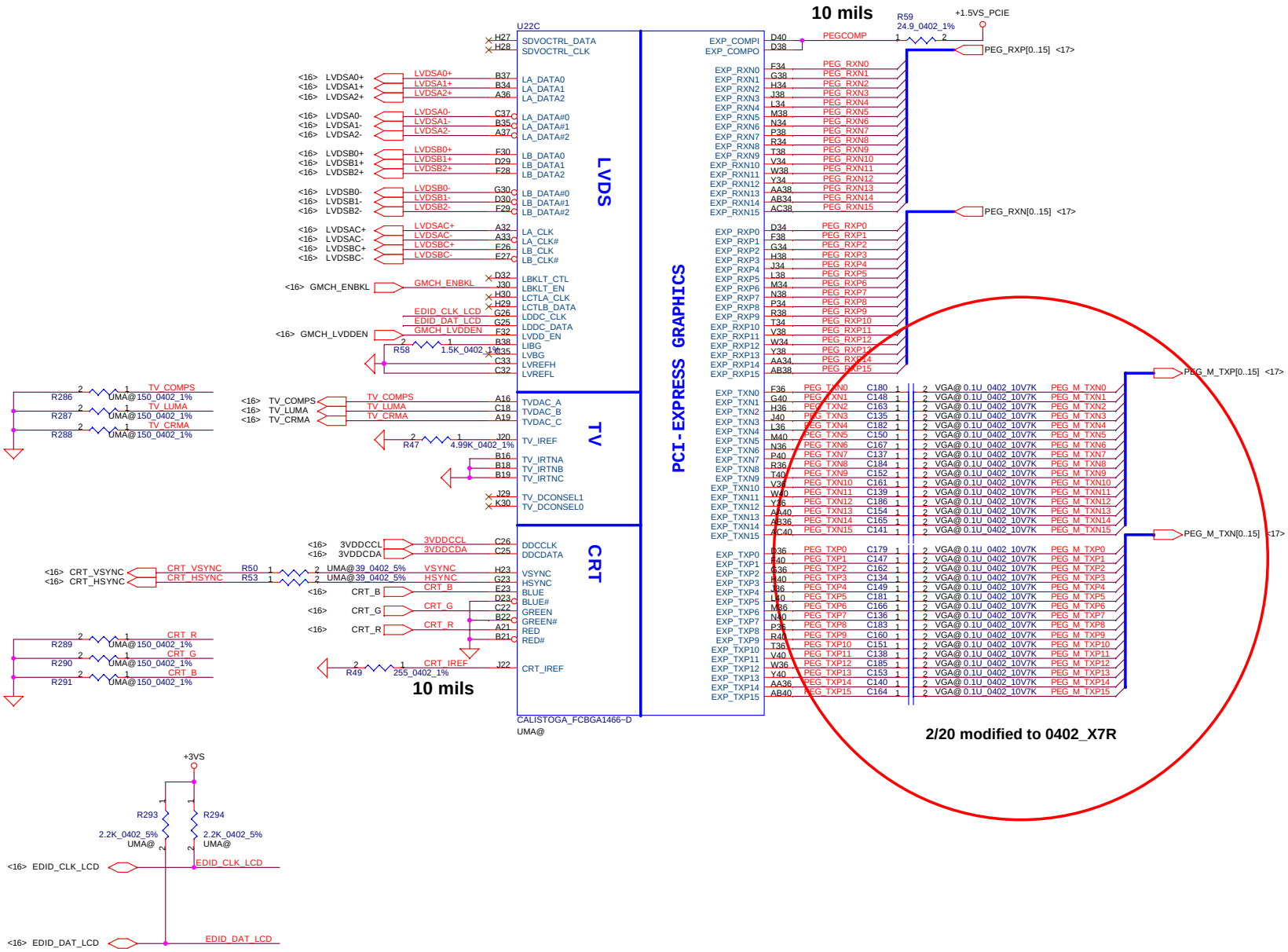


| Security Classification | Compal Secret Data | | |
|---|---|---|---|
| Issued Date | 2005/10/06 | Deciphered Date | 2006/10/06 |

THIS SHEET OF ENGINEERING DRAWING IS THE PROPRIETARY PROPERTY OF COMPAL ELECTRONICS, INC. AND CONTAINS CONFIDENTIAL AND TRADE SECRET INFORMATION. THIS SHEET MAY NOT BE TRANSFERRED FROM THE CUSTODY OF THE COMPETENT DIVISION OF R&D DEPARTMENT EXCEPT AS AUTHORIZED BY COMPAL ELECTRONICS, INC. NEITHER THIS SHEET NOR THE INFORMATION IT CONTAINS MAY BE USED BY OR DISCLOSED TO ANY THIRD PARTY WITHOUT PRIOR WRITTEN CONSENT OF COMPAL ELECTRONICS, INC.

**Compal Electronics, Inc.**

Title: **Calistoga (3/6)**

Size: Custom | Document Number: **HEL80/81 LA-3161P** | Rev: 0.2

Date: Thursday, February 23, 2006 | Sheet 9 of 43

http://laptopblue.vn/

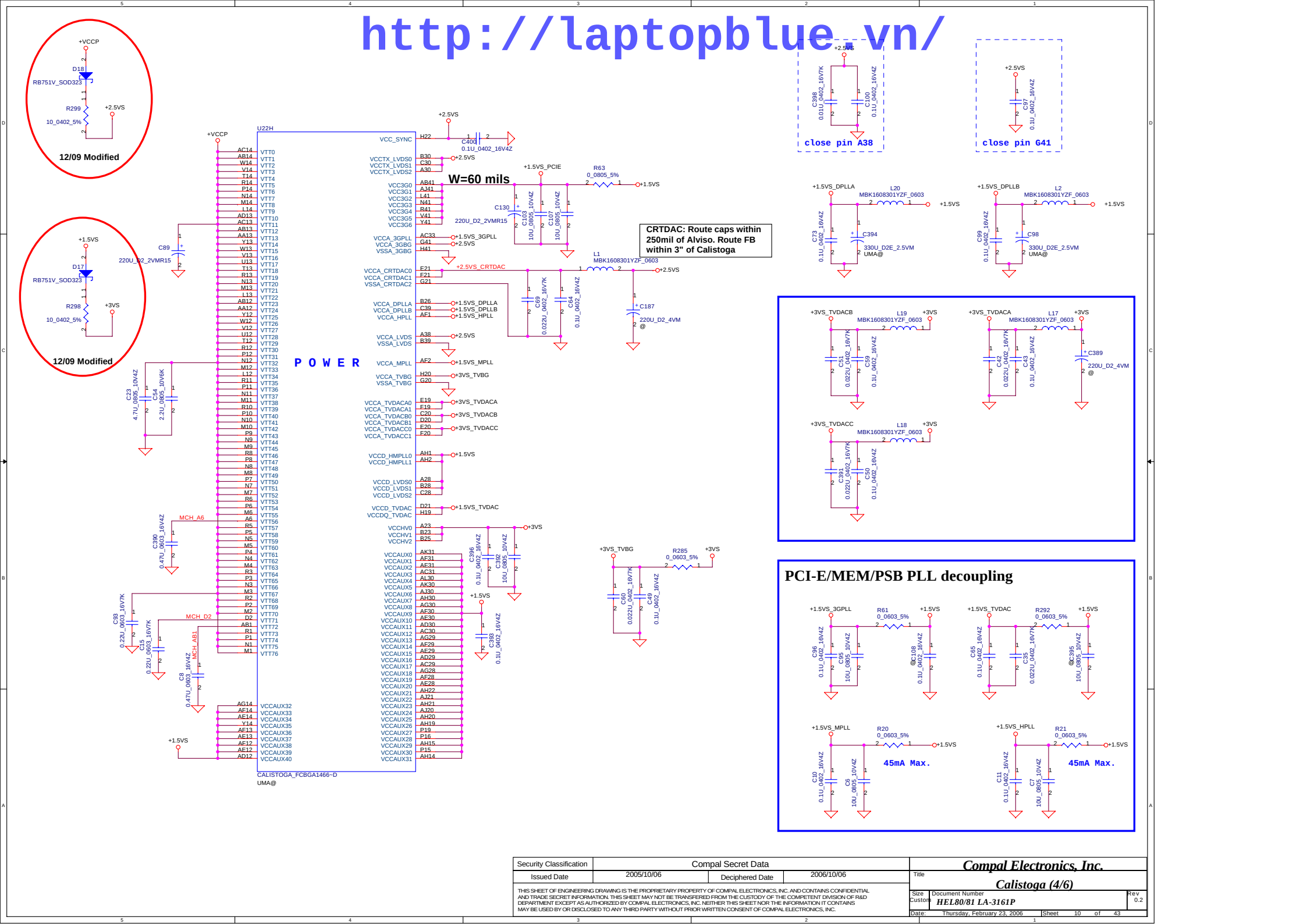


| Security Classification | Compal Secret Data | | |
|---|---|---|---|
| Issued Date | 2005/10/06 | Deciphered Date | 2006/10/06 |

THIS SHEET OF ENGINEERING DRAWING IS THE PROPRIETARY PROPERTY OF COMPAL ELECTRONICS, INC. AND CONTAINS CONFIDENTIAL AND TRADE SECRET INFORMATION. THIS SHEET MAY NOT BE TRANSFERED FROM THE CUSTODY OF THE COMPETENT DIVISION OF R&D DEPARTMENT EXCEPT AS AUTHORIZED BY COMPAL ELECTRONICS, INC. NEITHER THIS SHEET NOR THE INFORMATION IT CONTAINS MAY BE USED BY OR DISCLOSED TO ANY THIRD PARTY WITHOUT PRIOR WRITTEN CONSENT OF COMPAL ELECTRONICS, INC.

Compal Electronics, Inc.

Title: Calistoga (4/6)

Size: Custom | Document Number: HEL80/81 LA-3161P | Rev: 0.2

Date: Thursday, February 23, 2006 | Sheet 10 of 43

http://laptopblue.vn/

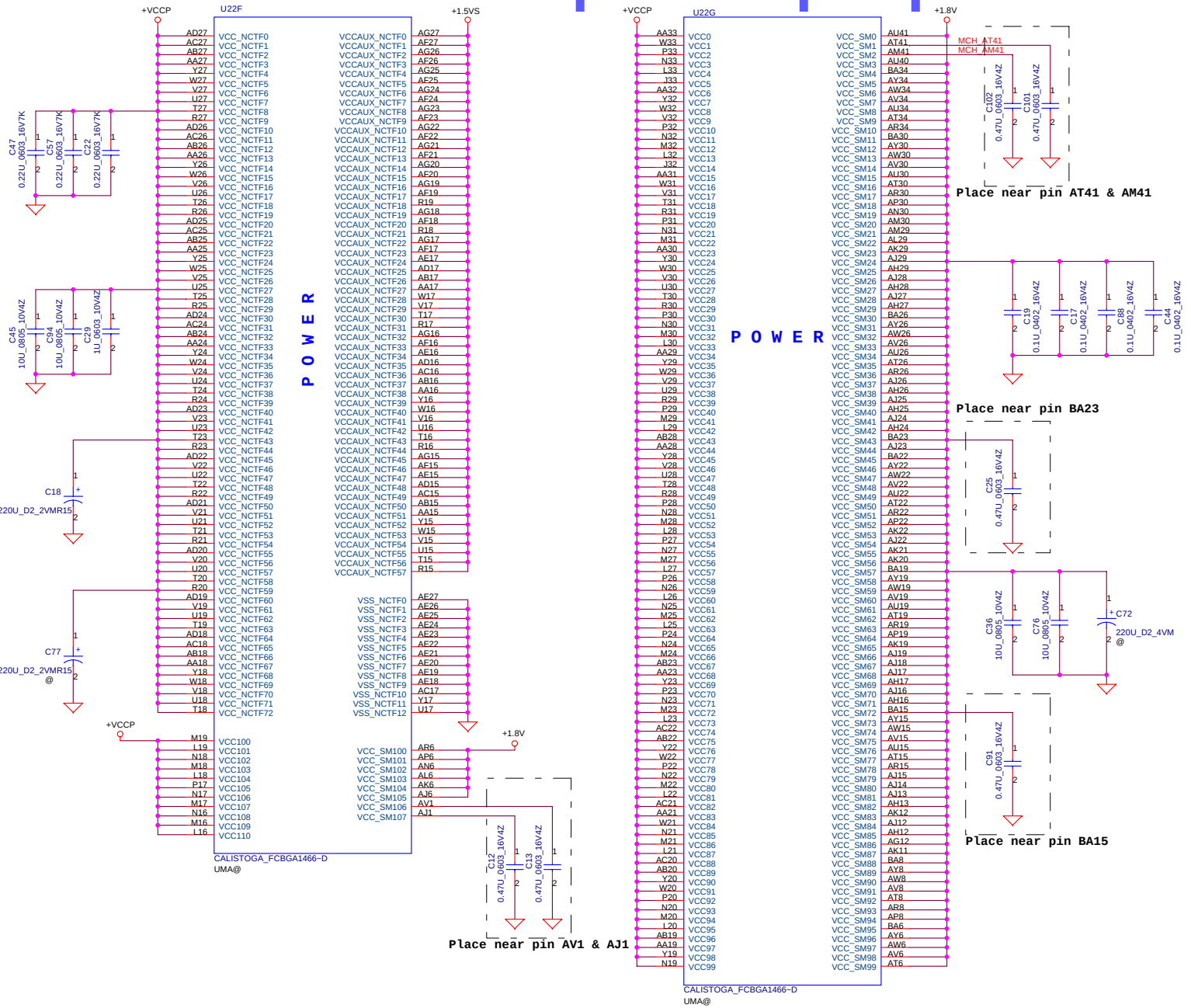


## Strap Pin Table

CFG[3:17] have internal pull up

CFG[19:18] have internal pull down

| | |
|---|---|
| CFG[2:0] | 011 = 667MT/s FSB<br>001 = 533MT/s FSB |
| CFG5 | 0 = DMI x 2<br>1 = DMI x 4*(Default) |
| CFG7 | 0 = Reserved<br>1 = Mobile Yonah CPU*(Default) |
| CFG9 | 0 = Lane Reversal Enable<br>1 = Normal Operation (Default)* |
| CFG6<br>PSB 4X CLK Enable | 0 = Reserved<br>1 = Calistoga * |
| CFG[13:12] | 00 = Reserved<br>01 = XOR Mode Enabled<br>10 = All Z Mode Enabled<br>11 = Normal Operation *(Default) |
| CFG16 | 0 = Dynamic ODT Disabled<br>1 = Dynamic ODT Enabled *(Default) |
| CFG10 CFG18 | 10 = 1.05V*(Default)<br>01 = 1.5V |
| CFG19 | 0 = Normal Operation * (Default)<br>1 = DMI Lane Reversal Enable |
| SDVO_CTRLDATA | 0 = No SDVO Device Present * (Default)<br>1 = SDVO Device Present |
| CFG20<br>(PCIE/SDVO select) | 0 = Only PCIE or SDVO is operational. *(Default)<br>1 = PCIE/SDVO are operating simu. |

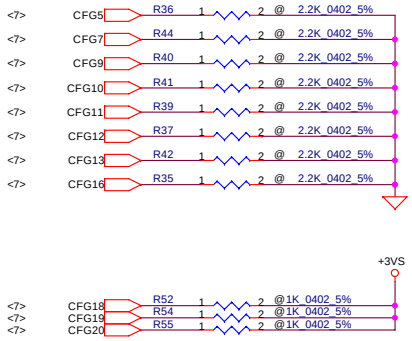


| | | | |
|---|---|---|---|
| Security Classification | Compal Secret Data | | |
| Issued Date | 2005/10/06 | Deciphered Date | 2006/10/06 |

THIS SHEET OF ENGINEERING DRAWING IS THE PROPRIETARY PROPERTY OF COMPAL ELECTRONICS, INC. AND CONTAINS CONFIDENTIAL AND TRADE SECRET INFORMATION. THIS SHEET MAY NOT BE TRANSFERRED FROM THE CUSTODY OF THE COMPETENT DIVISION OF R&D DEPARTMENT EXCEPT AS AUTHORIZED BY COMPAL ELECTRONICS, INC. NEITHER THIS SHEET NOR THE INFORMATION IT CONTAINS MAY BE USED BY OR DISCLOSED TO ANY THIRD PARTY WITHOUT PRIOR WRITTEN CONSENT OF COMPAL ELECTRONICS, INC.

Compal Electronics, Inc.

Title: Calistoga (5/6)

Size: Custom | Document Number: HEL80/81 LA-3161P | Rev: 0.2

Date: Thursday, February 23, 2006 | Sheet 11 of 43

http://laptopblue.vn/

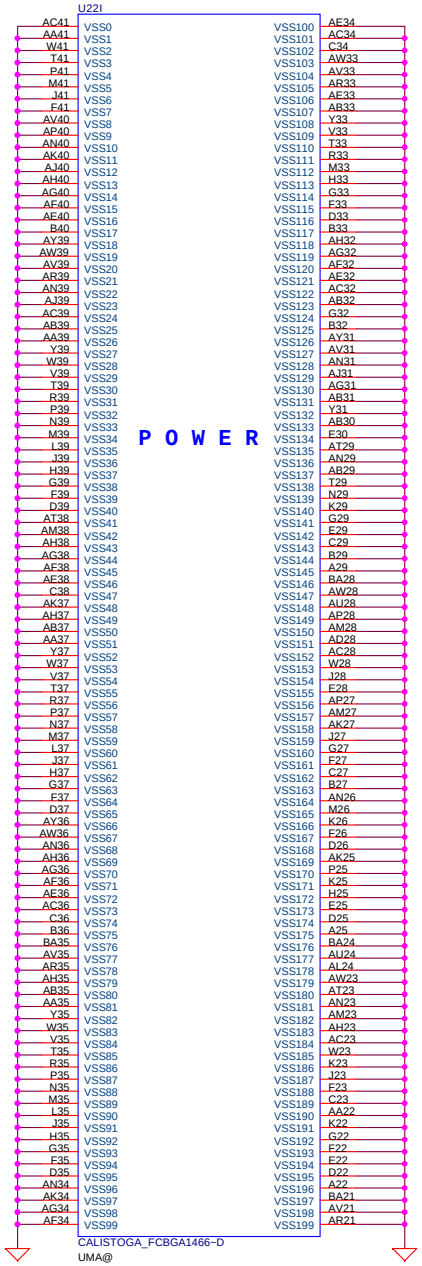


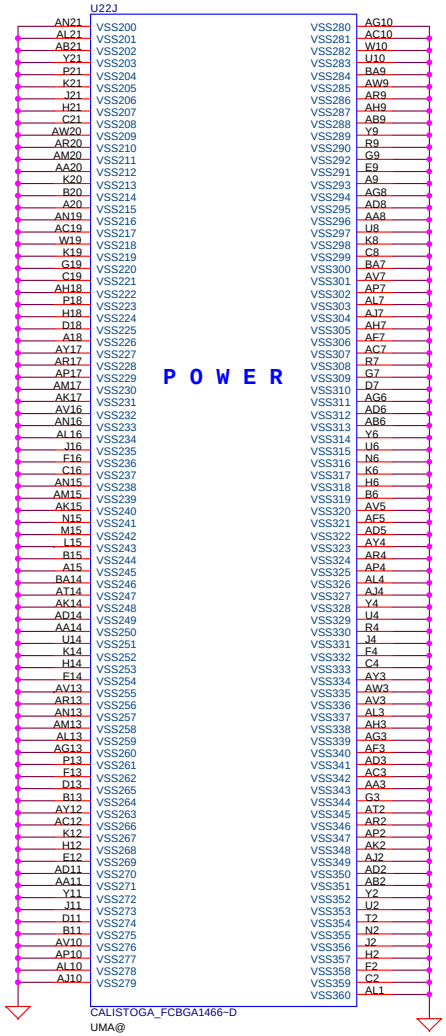


| Security Classification | Compal Secret Data | | |
|---|---|---|---|
| Issued Date | 2005/10/06 | Deciphered Date | 2006/10/06 |

THIS SHEET OF ENGINEERING DRAWING IS THE PROPRIETARY PROPERTY OF COMPAL ELECTRONICS, INC. AND CONTAINS CONFIDENTIAL AND TRADE SECRET INFORMATION. THIS SHEET MAY NOT BE TRANSFERRED FROM THE CUSTODY OF THE COMPETENT DIVISION OF R&D DEPARTMENT EXCEPT AS AUTHORIZED BY COMPAL ELECTRONICS, INC. NEITHER THIS SHEET NOR THE INFORMATION IT CONTAINS MAY BE USED BY OR DISCLOSED TO ANY THIRD PARTY WITHOUT PRIOR WRITTEN CONSENT OF COMPAL ELECTRONICS, INC.

**Compal Electronics, Inc.**

Title: **Calistoga (6/6)**

Size: Custom | Document Number: *HEL80/81 LA-3161P* | Rev: 0.2

Date: Thursday, February 23, 2006 | Sheet 12 of 43

http://laptopblue.vn/

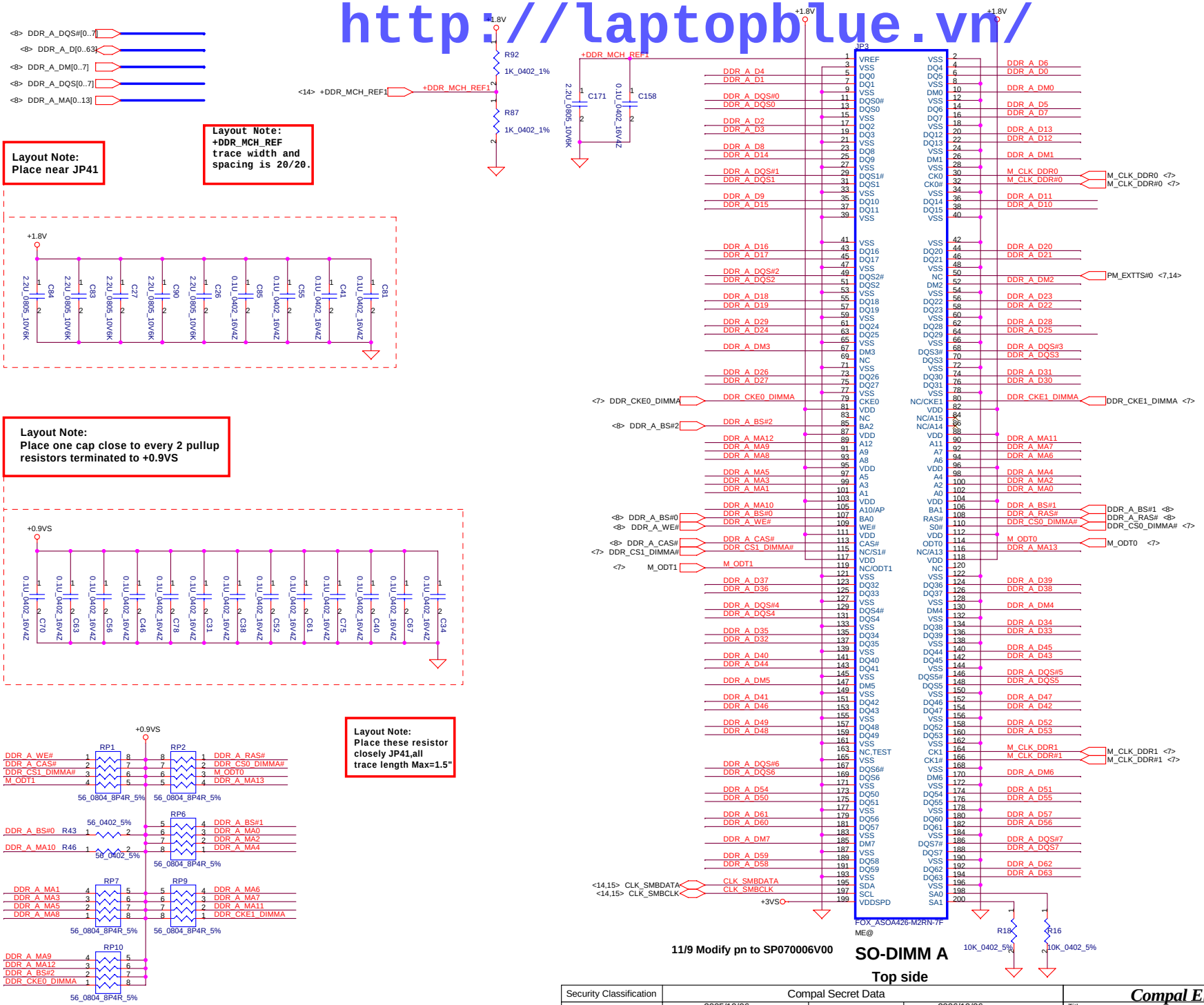


| Security Classification | Compal Secret Data | | |
|---|---|---|---|
| Issued Date | 2005/10/06 | Deciphered Date | 2006/10/06 |

THIS SHEET OF ENGINEERING DRAWING IS THE PROPRIETARY PROPERTY OF COMPAL ELECTRONICS, INC. AND CONTAINS CONFIDENTIAL AND TRADE SECRET INFORMATION. THIS SHEET MAY NOT BE TRANSFERRED FROM THE CUSTODY OF THE COMPETENT DIVISION OF R&D DEPARTMENT EXCEPT AS AUTHORIZED BY COMPAL ELECTRONICS, INC. NEITHER THIS SHEET NOR THE INFORMATION IT CONTAINS MAY BE USED BY OR DISCLOSED TO ANY THIRD PARTY WITHOUT PRIOR WRITTEN CONSENT OF COMPAL ELECTRONICS, INC.

**Compal Electronics, Inc.**

Title: **DDRII-SODIMM SLOT1**

Size: Custom | Document Number: HEL80 LA-3161P | Rev: 0.2

Date: Thursday, February 23, 2006 | Sheet 13 of 43

http://laptopblue.vn/

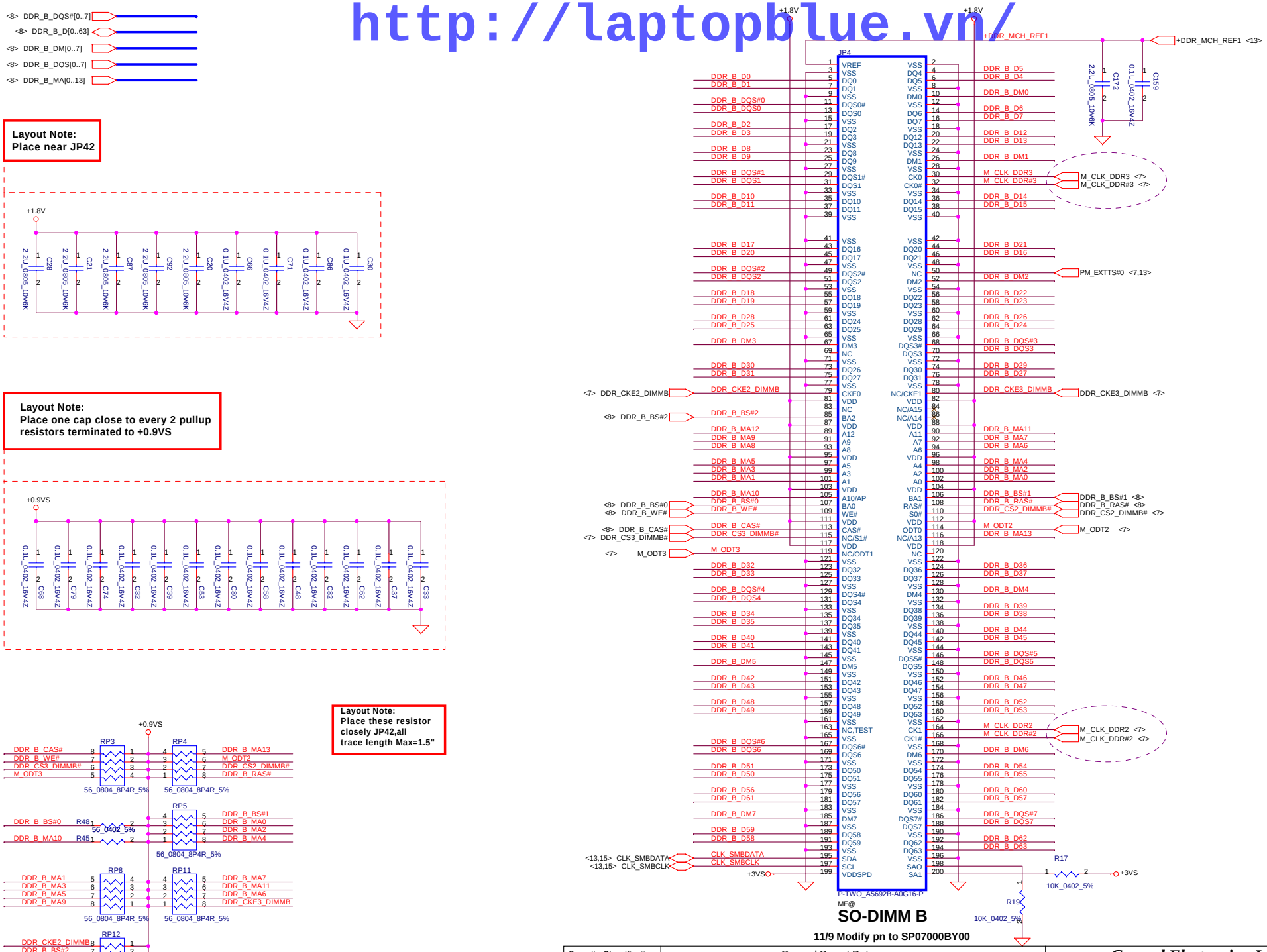


| Security Classification | Compal Secret Data | | |
|---|---|---|---|
| Issued Date | 2005/10/06 | Deciphered Date | 2006/10/06 |

THIS SHEET OF ENGINEERING DRAWING IS THE PROPRIETARY PROPERTY OF COMPAL ELECTRONICS, INC. AND CONTAINS CONFIDENTIAL AND TRADE SECRET INFORMATION. THIS SHEET MAY NOT BE TRANSFERRED FROM THE CUSTODY OF THE COMPETENT DIVISION OF R&D DEPARTMENT EXCEPT AS AUTHORIZED BY COMPAL ELECTRONICS, INC. NEITHER THIS SHEET NOR THE INFORMATION IT CONTAINS MAY BE USED BY OR DISCLOSED TO ANY THIRD PARTY WITHOUT PRIOR WRITTEN CONSENT OF COMPAL ELECTRONICS, INC.

**Compal Electronics, Inc.**

Title: **DDRII-SODIMM SLOT2**

Size | Document Number: **HEL80 LA-3161P** | Rev: 0.2

Date: Thursday, February 23, 2006 | Sheet 14 of 43

http://laptopblue.vn/

| FSLC CLKSEL2 | FSLB CLKSEL1 | FSLA CLKSEL0 | CPU MHz | SRC MHz | PCI MHz |
|---|---|---|---|---|---|
| 0 | 0 | 1 | 133 | 100 | 33.3 |
| 0 | 1 | 1 | 166 | 100 | 33.3 |

Table : ICS954306

## FSB Frequency Selet:

| | | |
|---|---|---|
| CPU Driven *(Default) | Stuff | CLK_Ra CLK_Rb CLK_Rc |
| | No Stuff | CLK_Rd CLK_Re CLK_Rf |
| 533MHz | Stuff | CLK_Rd CLK_Re CLK_Rf |
| | No Stuff | CLK_Ra CLK_Rb CLK_Rc |
| 667MHz | Stuff | CLK_Rd CLK_Rf |
| | No Stuff | CLK_Ra CLK_Rb CLK_Rc CLK_Re |

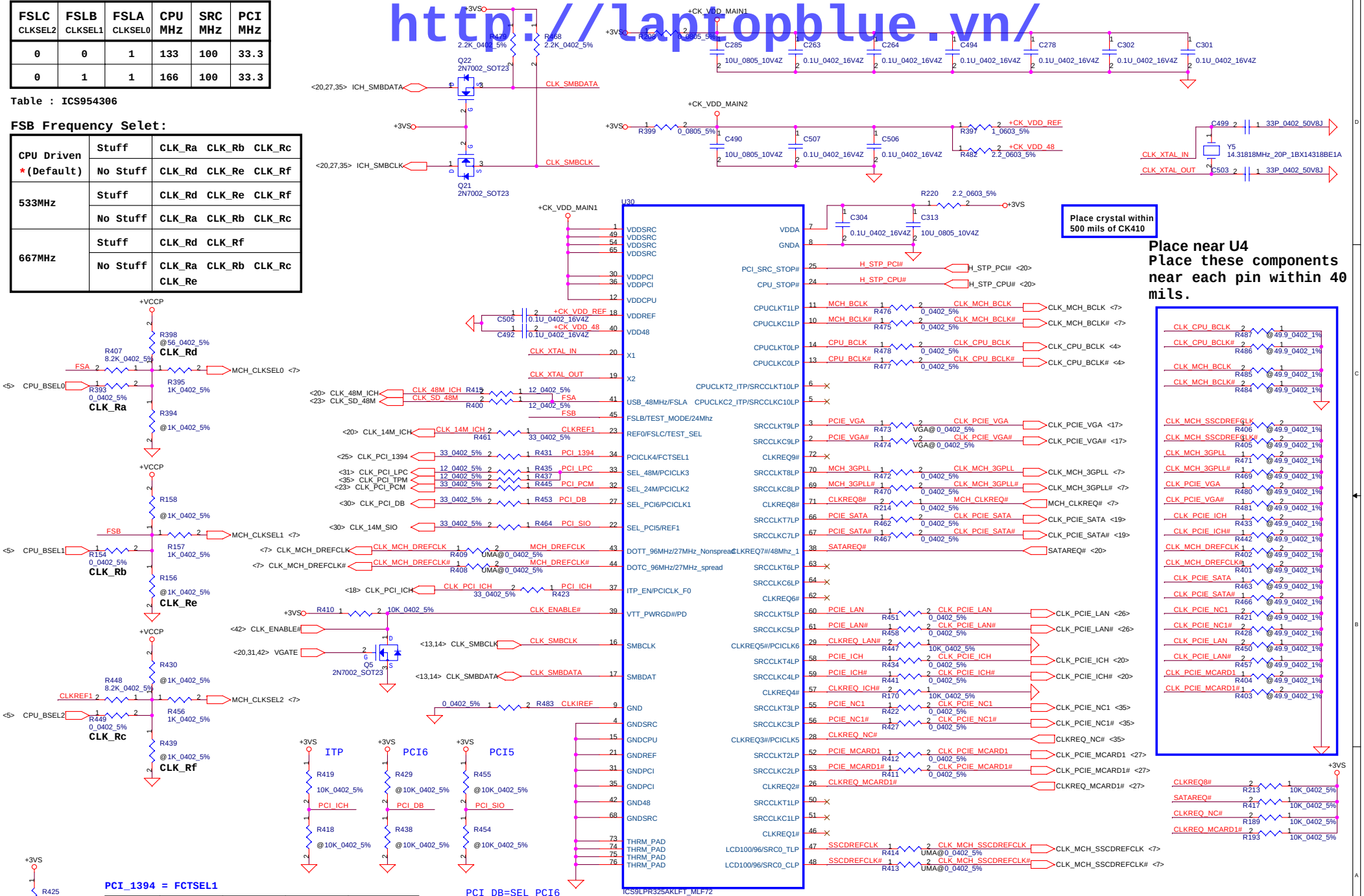


PCI_1394 = FCTSEL1

| FCTSEL1 (PIN34) | PIN43 | PIN44 | PIN47 | PIN48 |
|---|---|---|---|---|
| 0 | DOT96T | DOT96C | 96/100M_T | 96/100M_C |
| 1 | 27Mout | 27MSSout | SRCT0 | SRCC0 |

PCI_DB=SEL_PCI6

| PCI_DB | PIN27 |
|---|---|
| 0 | CLKREQ5 |
| 1 | PCICLK6 |

ICS9LPR325CKLFT_MLF72: SA00000RE20

SLG8LP465VTR: SA00000TS00

2005/11/8 modify footprint to ICS954305DKLFT_MLF72 for Thermal Pad use

| Security Classification | Compal Secret Data | | |
|---|---|---|---|
| Issued Date | 2005/03/10 | Deciphered Date | 2006/03/10 |

THIS SHEET OF ENGINEERING DRAWING IS THE PROPRIETARY PROPERTY OF COMPAL ELECTRONICS, INC. AND CONTAINS CONFIDENTIAL AND TRADE SECRET INFORMATION. THIS SHEET MAY NOT BE TRANSFERED FROM THE CUSTODY OF THE COMPETENT DIVISION OF R&D DEPARTMENT EXCEPT AS AUTHORIZED BY COMPAL ELECTRONICS, INC. NEITHER THIS SHEET NOR THE INFORMATION IT CONTAINS MAY BE USED BY OR DISCLOSED TO ANY THIRD PARTY WITHOUT PRIOR WRITTEN CONSENT OF COMPAL ELECTRONICS, INC.

Compal Electronics, Inc.

Title: Clock generator

Size: | Document Number: HEL80 LA-3161P | Rev: 0.2

Date: Thursday, February 23, 2006 | Sheet 15 of 43

http://laptopblue.vn/

## TV-OUT Conn.

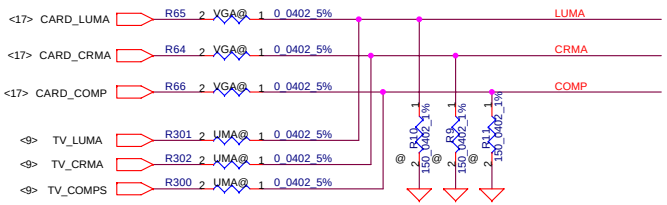


Pop when with internal graphics

## VGA I/O PORT Conn.

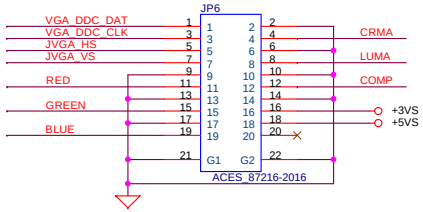


## UMA LCD / PANEL Conn.

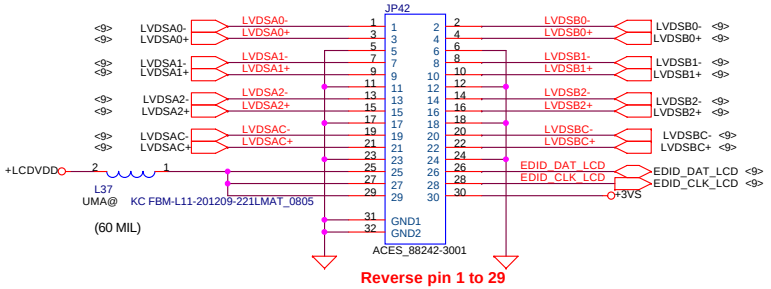


Reverse pin 1 to 29

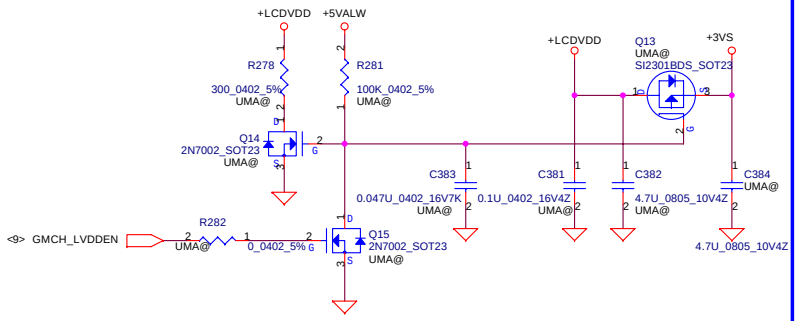


## CRT Conn.

2/09 Add for Compliance Engineering request

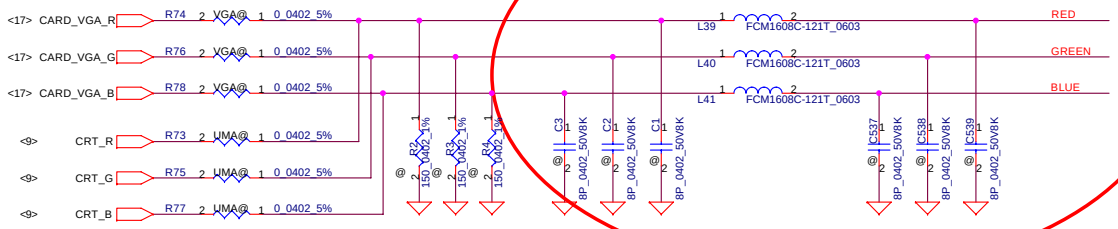


Pop when with internal graphics

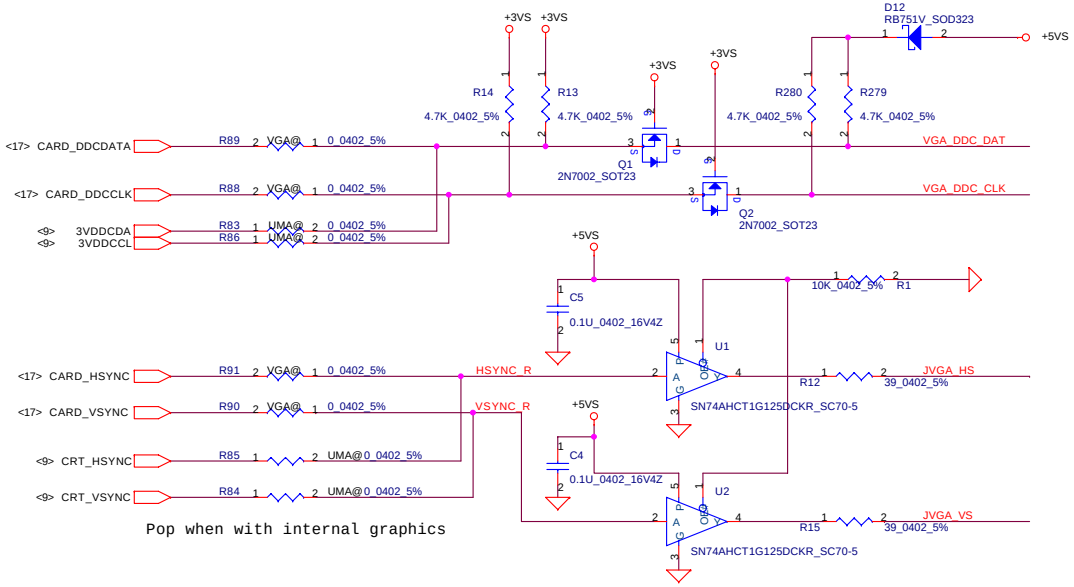


Pop when with internal graphics

## INVERTER Conn.

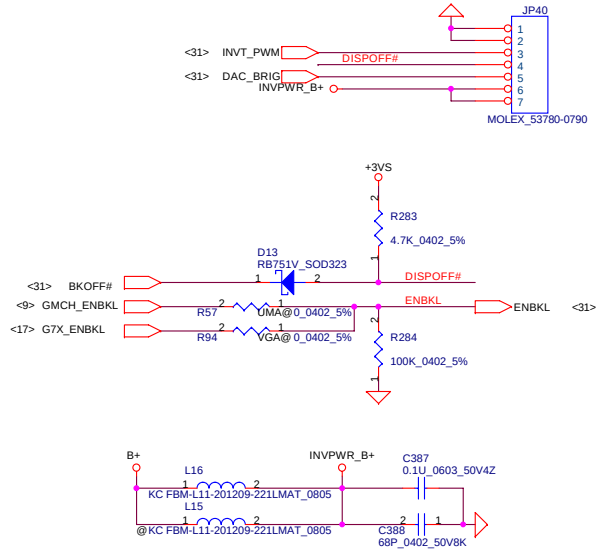


| Security Classification | Compal Secret Data | | |
|---|---|---|---|
| Issued Date | 2005/10/06 | Deciphered Date | 2006/10/06 |

THIS SHEET OF ENGINEERING DRAWING IS THE PROPRIETARY PROPERTY OF COMPAL ELECTRONICS, INC. AND CONTAINS CONFIDENTIAL AND TRADE SECRET INFORMATION. THIS SHEET MAY NOT BE TRANSFERED FROM THE CUSTODY OF THE COMPETENT DIVISION OF R&D DEPARTMENT EXCEPT AS AUTHORIZED BY COMPAL ELECTRONICS, INC. NEITHER THIS SHEET NOR THE INFORMATION IT CONTAINS MAY BE USED BY OR DISCLOSED TO ANY THIRD PARTY WITHOUT PRIOR WRITTEN CONSENT OF COMPAL ELECTRONICS, INC.

**Compal Electronics, Inc.**

Title: **CRT & TVout Connector**

Size: Custom | Document Number: HEL80 LA-3161P | Rev: 0.2

Date: Thursday, February 23, 2006 | Sheet 16 of 43

http://laptopblue.vn/

MAX. 4.06A @ 1.8V
MAX. 130mA @ 2.5V
MAX. 655mA @ 3.3V

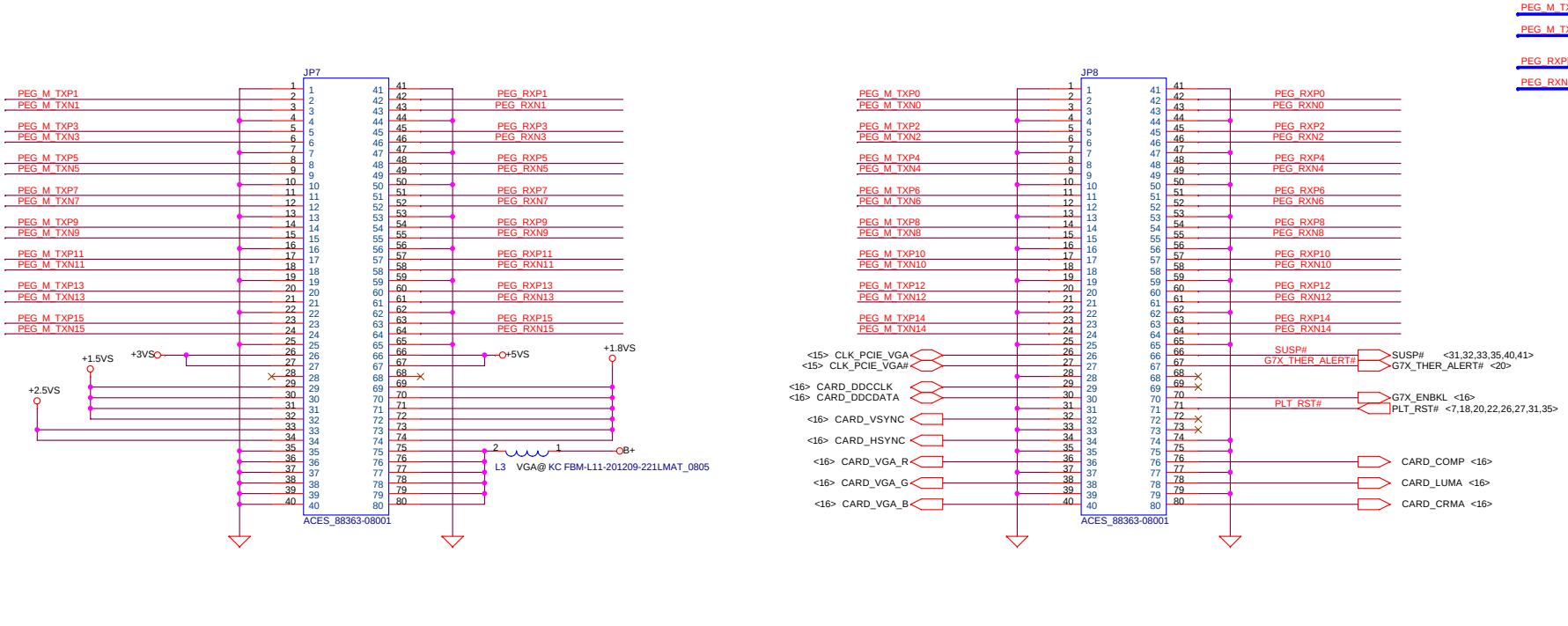


| Security Classification | Compal Secret Data | | |
|---|---|---|---|
| Issued Date | 2005/10/06 | Deciphered Date | 2006/10/06 |

THIS SHEET OF ENGINEERING DRAWING IS THE PROPRIETARY PROPERTY OF COMPAL ELECTRONICS, INC. AND CONTAINS CONFIDENTIAL AND TRADE SECRET INFORMATION. THIS SHEET MAY NOT BE TRANSFERED FROM THE CUSTODY OF THE COMPETENT DIVISION OF R&D DEPARTMENT EXCEPT AS AUTHORIZED BY COMPAL ELECTRONICS, INC. NEITHER THIS SHEET NOR THE INFORMATION IT CONTAINS MAY BE USED BY OR DISCLOSED TO ANY THIRD PARTY WITHOUT PRIOR WRITTEN CONSENT OF COMPAL ELECTRONICS, INC.

**Compal Electronics, Inc.**

Title: **VGA/B connector**

Size | Document Number: **HEL80 LA-3161P** | Rev: 0.2

Date: Thursday, February 23, 2006 | Sheet 17 of 43

http://laptopblue.vn/

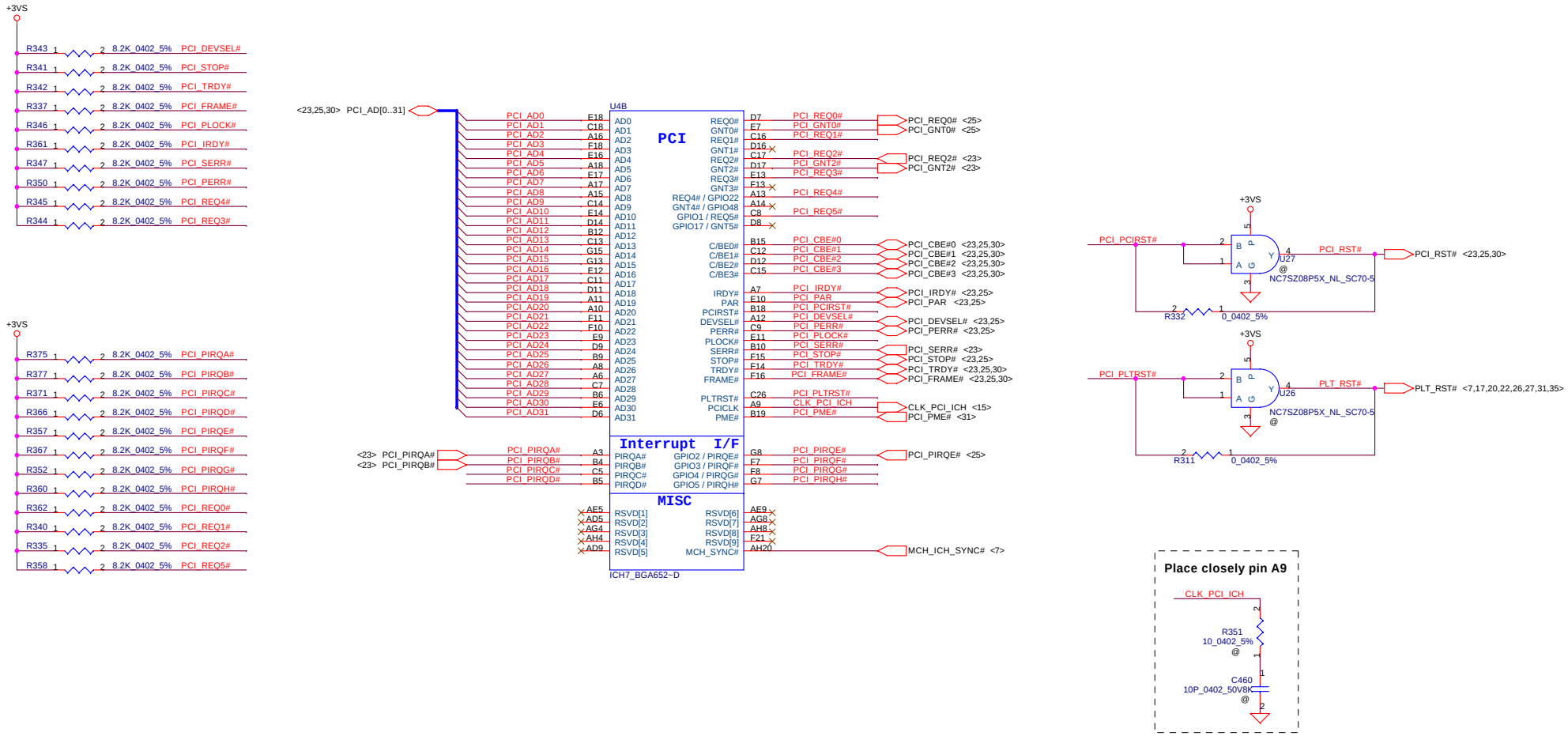


| Security Classification | Compal Secret Data | | |
|---|---|---|---|
| Issued Date | 2005/10/06 | Deciphered Date | 2006/10/06 |

THIS SHEET OF ENGINEERING DRAWING IS THE PROPRIETARY PROPERTY OF COMPAL ELECTRONICS, INC. AND CONTAINS CONFIDENTIAL AND TRADE SECRET INFORMATION. THIS SHEET MAY NOT BE TRANSFERRED FROM THE CUSTODY OF THE COMPETENT DIVISION OF R&D DEPARTMENT EXCEPT AS AUTHORIZED BY COMPAL ELECTRONICS, INC. NEITHER THIS SHEET NOR THE INFORMATION IT CONTAINS MAY BE USED BY OR DISCLOSED TO ANY THIRD PARTY WITHOUT PRIOR WRITTEN CONSENT OF COMPAL ELECTRONICS, INC.

**Compal Electronics, Inc.**

Title: **ICH7-M(1/4)**

Size | Document Number: **HEL80 LA-3161P** | Rev: 0.2

Date: Thursday, February 23, 2006 | Sheet 18 of 43

http://laptopblue.vn/

**Close to U7**

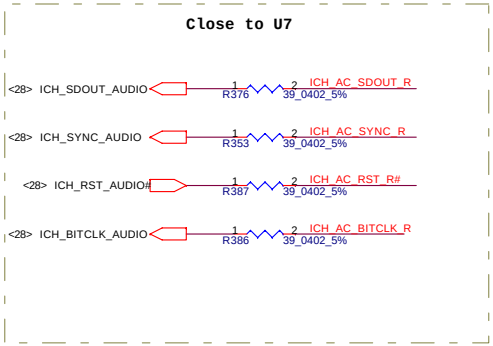


**12/12 Added**

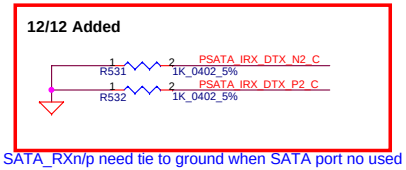


SATA_RXn/p need tie to ground when SATA port no used

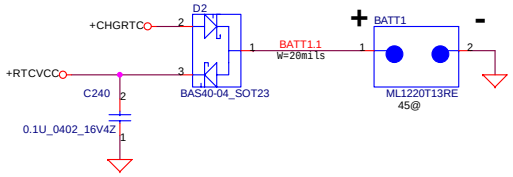


| Security Classification | Compal Secret Data | | |
|---|---|---|---|
| Issued Date | 2005/10/06 | Deciphered Date | 2006/10/06 |

THIS SHEET OF ENGINEERING DRAWING IS THE PROPRIETARY PROPERTY OF COMPAL ELECTRONICS, INC. AND CONTAINS CONFIDENTIAL AND TRADE SECRET INFORMATION. THIS SHEET MAY NOT BE TRANSFERED FROM THE CUSTODY OF THE COMPETENT DIVISION OF R&D DEPARTMENT EXCEPT AS AUTHORIZED BY COMPAL ELECTRONICS, INC. NEITHER THIS SHEET NOR THE INFORMATION IT CONTAINS MAY BE USED BY OR DISCLOSED TO ANY THIRD PARTY WITHOUT PRIOR WRITTEN CONSENT OF COMPAL ELECTRONICS, INC.

**Compal Electronics, Inc.**

Title: ICH7-M(2/4)

Size: Custom | Document Number: HEL80 LA-3161P | Rev: 0.2

Date: Thursday, February 23, 2006 | Sheet 19 of 43

http://laptopblue.vn/

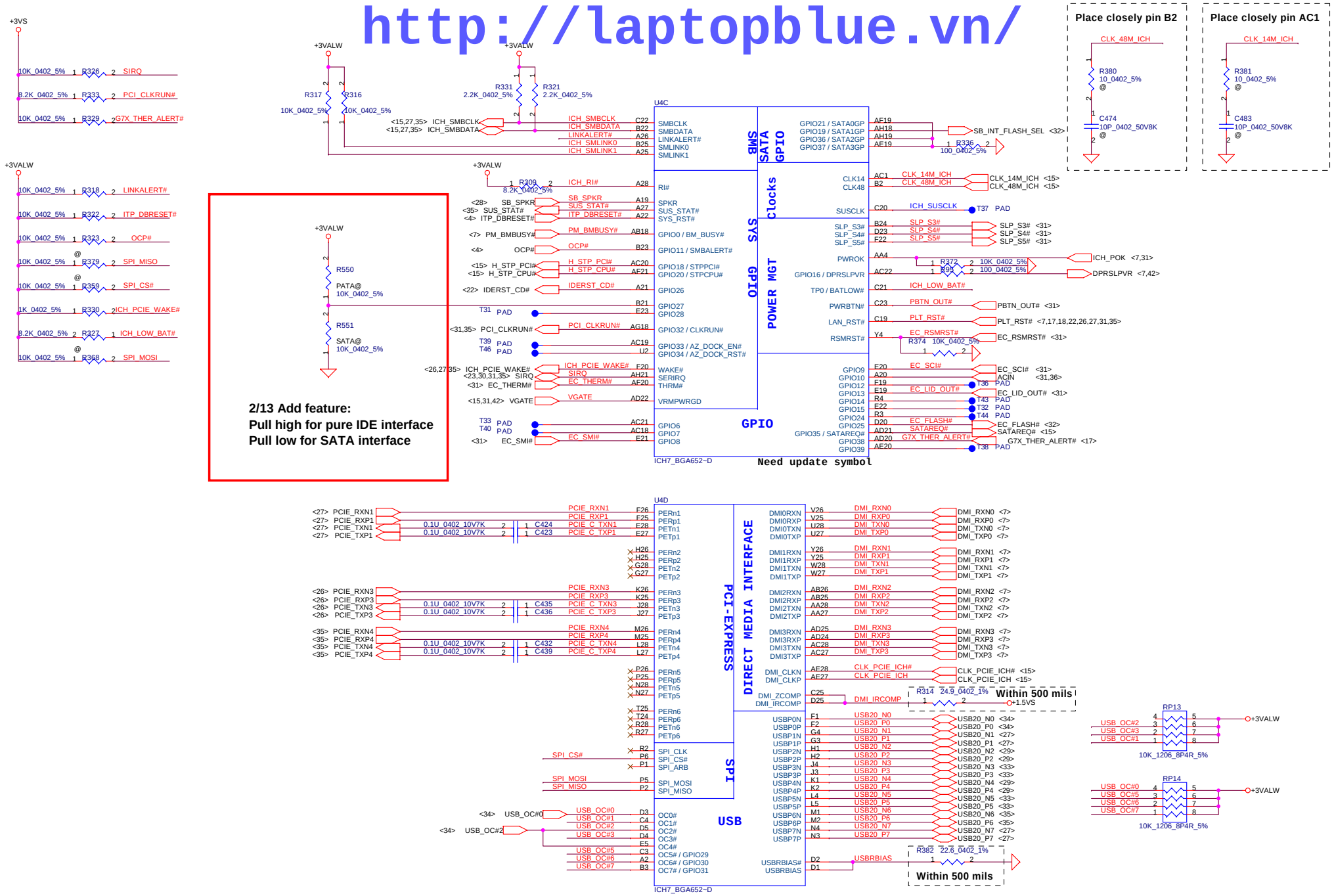


| Security Classification | Compal Secret Data | | |
|---|---|---|---|
| Issued Date | 2005/10/06 | Deciphered Date | 2006/10/06 |

THIS SHEET OF ENGINEERING DRAWING IS THE PROPRIETARY PROPERTY OF COMPAL ELECTRONICS, INC. AND CONTAINS CONFIDENTIAL AND TRADE SECRET INFORMATION. THIS SHEET MAY NOT BE TRANSFERRED FROM THE CUSTODY OF THE COMPETENT DIVISION OF R&D DEPARTMENT EXCEPT AS AUTHORIZED BY COMPAL ELECTRONICS, INC. NEITHER THIS SHEET NOR THE INFORMATION IT CONTAINS MAY BE USED BY OR DISCLOSED TO ANY THIRD PARTY WITHOUT PRIOR WRITTEN CONSENT OF COMPAL ELECTRONICS, INC.

**Compal Electronics, Inc.**

Title: **ICH7-M(3/4)**

Size: Custom | Document Number: **HEL80 LA-3161P** | Rev: 0.2

Date: Thursday, February 23, 2006 | Sheet 20 of 43

http://laptopblue.vn/

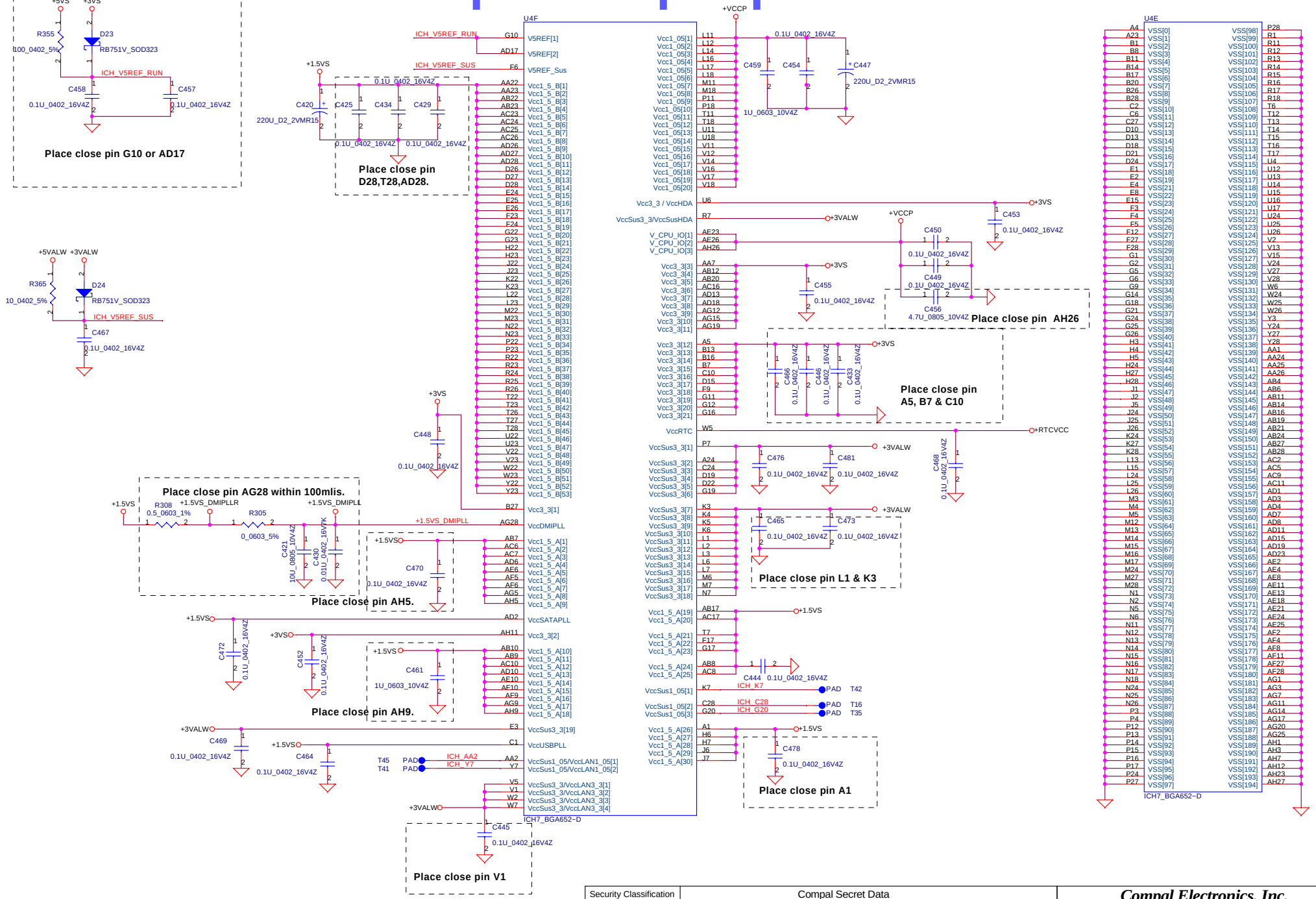


| Security Classification | Compal Secret Data | | |
|---|---|---|---|
| Issued Date | 2005/10/06 | Deciphered Date | 2006/10/06 |

THIS SHEET OF ENGINEERING DRAWING IS THE PROPRIETARY PROPERTY OF COMPAL ELECTRONICS, INC. AND CONTAINS CONFIDENTIAL AND TRADE SECRET INFORMATION. THIS SHEET MAY NOT BE TRANSFERRED FROM THE CUSTODY OF THE COMPETENT DIVISION OF R&D DEPARTMENT EXCEPT AS AUTHORIZED BY COMPAL ELECTRONICS, INC. NEITHER THIS SHEET NOR THE INFORMATION IT CONTAINS MAY BE USED BY OR DISCLOSED TO ANY THIRD PARTY WITHOUT PRIOR WRITTEN CONSENT OF COMPAL ELECTRONICS, INC.

**Compal Electronics, Inc.**

Title: **ICH7-M(4/4)**

Size: Custom | Document Number: **HEL80 LA-3161P** | Rev: 0.2

Date: Thursday, February 23, 2006 | Sheet 21 of 43

http://laptopblue.vn/

## SA880400020 Marvell 8040 TQFP64_Lead Free

U11

SATA: TXP, TXM, RXP, RXM
Parallel ATA: HDD0–HDD15, HDA0, HDA1, HDA2, HCS0#, HCS1#, HIOCS16#, HINTRQ, HDMACK#, HIORDY, HDIOR#, HDIOW#, HDMARQ, HRESET#, HPDIAG#
Config & Debug: RST#, T0, T1, T2, T3, T4, T5, T6, T7, CNFG2, CNFG1, CNFG0, ATAIOSEL, XTLIN/OSC, XTLOUT
Power: ISET, VDDIO_0, VDDIO_1, VDD_0, VDD_1, VDD_2, VAA1, VAA2, VSS1, VSS2, GND_0, GND_1, GND_2
UART: UAO, UAI

88SA8040_TQFP64
8040@

PIDE_DD0 62 HDD0
PIDE_DD1 64 HDD1
PIDE_DD2 2 HDD2
PIDE_DD3 5 HDD3
PIDE_DD4 7 HDD4
PIDE_DD5 11 HDD5
PIDE_DD6 13 HDD6
PIDE_DD7 15 HDD7
PIDE_DD8 14 HDD8
PIDE_DD9 12 HDD9
PIDE_DD10 10 HDD10
PIDE_DD11 6 HDD11
PIDE_DD12 3 HDD12
PIDE_DD13 1 HDD13
PIDE_DD14 63 HDD14
PIDE_DD15 61 HDD15

PIDE_DA0 50 HDA0
PIDE_DA1 51 HDA1
PIDE_DA2 49 HDA2
PIDE_CS0# 48 HCS0#
PIDE_CS1# 47 HCS1#

PIDE_HIOCS16# 52 HIOCS16#
PIDE_INTRQ 53 HINTRQ
PIDE_DMACK# 54 HDMACK#
PIDE_DIORDY 55 HIORDY
PIDE_DIOR# 58 HDIOR#
PIDE_DIOW# 59 HDIOW#
PIDE_DREQ 60 HDMARQ
PIDE_R_RESET# 16 HRESET#
46 HPDIAG#

T27 PAD
R212 10K_0402_5% 8040@
T28 PAD
45 UAO
43 UAI

32 TXP — SATA_DTX_IRX_P0
31 TXM — SATA_DTX_IRX_N0
27 RXP — PSATA_ITX_DRX_P0 — PSATA_ITX_DRX_P0 <19>
28 RXM — PSATA_ITX_DRX_N0 — PSATA_ITX_DRX_N0 <19>

17 RST# — SATA_RESET#
33 T0 — T0
34 T1
35 T2 — T2
36 T3 — T3
37 T4
38 T5 — T5 — R233 1 2 8040@ 10K_0402_5%
39 T6 — T6
40 T7
20 CNFG2
19 CNFG1 — CNFG1 — R246 1 2 8040@ 10K_0402_5%
18 CNFG0
21 ATAIOSEL — ATAIOSEL

22 XTLIN/OSC — SATA_XTALI
23 XTLOUT — SATA_XTALO

26 ISET — R490 1 2 12.1K_0603_1% 8040@
44 VDDIO_0 — +3VS
4 VDDIO_1
9 VDD_0 — +1.8VS
41 VDD_1
56 VDD_2
24 VAA1
29 VAA2 — +1.8VS_VDDA — R492 8040@ 0_0603_5%
25 VSS1
30 VSS2 — FGND
8 GND_0
42 GND_1
57 GND_2

C330 0.01U_0402_16V7K 8040@
C329 0.1U_0402_16V4Z 8040@
L11 8040@MBK1608121YZF_0603 +3VS
L12 @MBK1608121YZF_0603 +1.8VS
C344 4.7U_0805_10V4Z 8040@
FGND

T0 R245 1 2 @10K_0402_5%
T2 R237 1 2 @10K_0402_5%
T3 R226 1 2 8040@10K_0402_5%
T6 R224 1 2 @10K_0402_5%
ATAIOSEL R247 1 2 8040@10K_0402_5%
PIDE_HIOCS16# R171 1 2 8040@10K_0402_5%

+3VS R251 100K_0402_5% @
SATA_RESET# R249 1 2 0_0402_5% 8040@ PLT_RST# <7,17,18,20,26,27,31,35>
C338 1U_0603_10V4Z @

PIDE_R_RESET# R235 2 1 PIDE_RESET# 8040@33_0402_5%

**PLACE Close to U61**

## SATA HDD Conn.

2005/11/4 Modified library pn:DC010003J00

**Main SATA +5V Default**

JP9

SATA_ITX_C_R_DRX_P0 — GND
SATA_ITX_C_R_DRX_N0 — A+
A-
GND
SATA_DTX_R_IRX_N0 — B-
SATA_DTX_R_IRX_P0 — B+
GND

V33 V33 V33 GND GND GND V5 V5 V5 GND Reserved GND V12 V12 V12

W=60mils at least
+3VS: C237 10U_0805_10V4Z @, C236 10U_0805_10V4Z @, C234 1U_0603_10V4Z @, C251 0.1U_0402_16V4Z @, C243 0.1U_0402_16V4Z @
W=60mils at least
+5VS: C218 10U_0805_10V4Z, C217 10U_0805_10V4Z, C216 1U_0603_10V4Z, C222 0.1U_0402_16V4Z @, C225 0.1U_0402_16V4Z @

SUYIN_127072FR022G210ZR_22P_SATA
SATA@

## PATA HDD Conn.

2005/11/4 Modified library pn:SP01000LU00

**Reverse pin 1 to 44, pin 2 to 43**

**Place closed to Connector**

PIDE_DIORDY — R206 8040@ 4.7K_0402_5%
PIDE_DREQ — R223 8040@ 5.6K_0402_5%
PIDE_INTRQ — R188 8040@ 10K_0402_5%
PIDE_DD7 — R263 @ 10K_0402_5%

+3VS

JP25

+5VS — PIDE_CS1# — PIDE_DA2 — PIDE_PDIAG#
T26 PAD — R198 475_0402_1% — PCSEL
+5VS — T30 PAD

PIDE_LED# — PIDE_CS0# — PIDE_DA0 — PIDE_DA1 — PIDE_INTRQ — PIDE_DMACK# — PIDE_DIORDY — PIDE_DIOR# — PIDE_DIOW# — PIDE_DREQ

PIDE_DD15 — PIDE_DD14 — PIDE_DD13 — PIDE_DD12 — PIDE_DD11 — PIDE_DD10 — PIDE_DD9 — PIDE_DD8 — PIDE_DD0 — PIDE_DD1 — PIDE_DD2 — PIDE_DD3 — PIDE_DD4 — PIDE_DD5 — PIDE_DD6 — PIDE_DD7 — PIDE_RESET#

SUYIN_200055FB044G202ZR_44P_P2_PATA_HDD
PATA@

**(NEW)**

+5VS R320 10K_0402_5% PIDE_LED# <34> PIDE_LED#

**Place closed to 3811**

2005/09/04

SATA@
SATA_ITX_C_R_DRX_P0 — PSATA_ITX_DRX_P0
SATA_ITX_C_R_DRX_N0 — PSATA_ITX_DRX_N0
RP15 0_0404_4P2R_5%

SATA@
SATA_DTX_R_IRX_N0 — SATA_DTX_IRX_N0
SATA_DTX_R_IRX_P0 — SATA_DTX_IRX_P0
RP16 0_0404_4P2R_5%

<19> PSATA_IRX_DTX_N0_C — PSATA_IRX_DTX_N0_C — C336 3900P_0402_50V7K — SATA_DTX_IRX_N0
<19> PSATA_IRX_DTX_P0_C — PSATA_IRX_DTX_P0_C — C331 3900P_0402_50V7K — SATA_DTX_IRX_P0

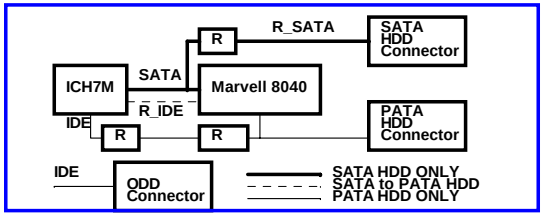


2005/10/19

| | | | | | | | |
|---|---|---|---|---|---|---|---|
| R_PIDE_DD2 | R113 | PATA@ | PD_D2 | R_PIDE_DD2 | R194 | PATA@ | PIDE_DD2 |
| R_PIDE_DD12 | R114 | PATA@ | PD_D12 | R_PIDE_DD12 | R199 | PATA@ | PIDE_DD12 |
| R_PIDE_DD3 | R115 | PATA@ | PD_D3 | R_PIDE_DD3 | R205 | PATA@ | PIDE_DD3 |
| R_PIDE_DD11 | R116 | PATA@ | PD_D11 | R_PIDE_DD11 | R210 | PATA@ | PIDE_DD11 |
| R_PIDE_DD4 | R137 | PATA@ | PD_D4 | R_PIDE_DD4 | R215 | PATA@ | PIDE_DD4 |
| R_PIDE_DD10 | R117 | PATA@ | PD_D10 | R_PIDE_DD10 | R217 | PATA@ | PIDE_DD10 |
| R_PIDE_DD5 | R122 | PATA@ | PD_D5 | R_PIDE_DD5 | R218 | PATA@ | PIDE_DD5 |
| R_PIDE_DD9 | R118 | PATA@ | PD_D9 | R_PIDE_DD9 | R222 | PATA@ | PIDE_DD9 |
| R_PIDE_DD6 | R136 | PATA@ | PD_D6 | R_PIDE_DD6 | R225 | PATA@ | PIDE_DD6 |
| R_PIDE_DD8 | R121 | PATA@ | PD_D8 | R_PIDE_DD8 | R227 | PATA@ | PIDE_DD8 |
| R_PIDE_DD7 | R133 | PATA@ | PD_D7 | R_PIDE_DD7 | R231 | PATA@ | PIDE_DD7 |
| R_PIDE_RESET# | R135 | PATA@ | IDE_RST# | R_PIDE_RESET# | R241 | PATA@ | PIDE_RESET# |
| R_PIDE_DD0 | R108 | PATA@ | PD_D0 | R_PIDE_DD0 | R177 | PATA@ | PIDE_DD0 |
| R_PIDE_DD14 | R111 | PATA@ | PD_D14 | R_PIDE_DD14 | R176 | PATA@ | PIDE_DD14 |
| R_PIDE_DD1 | R110 | PATA@ | PD_D1 | R_PIDE_DD1 | R175 | PATA@ | PIDE_DD1 |
| R_PIDE_DD13 | R112 | PATA@ | PD_D13 | R_PIDE_DD13 | R190 | PATA@ | PIDE_DD13 |
| R_PIDE_DIOR# | R106 | PATA@ | PD_IOR# | R_PIDE_DIOR# | R181 | PATA@ | PIDE_DIOR# |
| R_PIDE_DIOW# | R105 | PATA@ | PD_IOW# | R_PIDE_DIOW# | R180 | PATA@ | PIDE_DIOW# |
| R_PIDE_DREQ | R107 | PATA@ | PD_DREQ | R_PIDE_DREQ | R179 | PATA@ | PIDE_DREQ |
| R_PIDE_DD15 | R109 | PATA@ | PD_D15 | R_PIDE_DD15 | R178 | PATA@ | PIDE_DD15 |
| R_PIDE_DA1 | R101 | PATA@ | PD_A1 | R_PIDE_DA1 | R185 | PATA@ | PIDE_DA1 |
| R_PIDE_INTRQ | R102 | PATA@ | PD_IRQ | R_PIDE_INTRQ | R184 | PATA@ | PIDE_INTRQ |
| R_PIDE_DMACK# | R103 | PATA@ | PD_DACK# | R_PIDE_DMACK# | R183 | PATA@ | PIDE_DMACK# |
| R_PIDE_DIORDY | R104 | PATA@ | PD_IORDY | R_PIDE_DIORDY | R182 | PATA@ | PIDE_DIORDY |
| R_PIDE_CS1# | R97 | PATA@ | PD_CS#3 | R_PIDE_CS1# | R207 | PATA@ | PIDE_CS1# |
| R_PIDE_CS0# | R96 | PATA@ | PD_CS#1 | R_PIDE_CS0# | R203 | PATA@ | PIDE_CS0# |
| R_PIDE_DA2 | R98 | PATA@ | PD_A2 | R_PIDE_DA2 | R187 | PATA@ | PIDE_DA2 |
| R_PIDE_DA0 | R99 | PATA@ | PD_A0 | R_PIDE_DA0 | R186 | PATA@ | PIDE_DA0 |
| R_PIDE_PDIAG# | R100 | PATA@ | PD_DIAG# | R_PIDE_PDIAG# | R169 | PATA@ | PIDE_PDIAG# |

Y4 SATA_XTALI — SATA_XTALO 25MHZ_20PF_6X25000017 8040@
R248 0_0402_5% 8040@
R250 8040@ 10M_0402_5%
C339 27P_0402_50V8J 8040@
C340 27P_0402_50V8J 8040@

+1.8VS
C314 0.1U_0402_16V4Z 8040@
C504 8040@
C498 8040@
0.1U_0402_16V4Z 4.7U_0805_10V4Z

+3VS
C311 0.1U_0402_16V4Z 8040@
C501 0.1U_0402_16V4Z 8040@
C303 4.7U_0805_10V4Z 8040@
C375 8040@
0.1U_0402_16V4Z

## PATA ODD Conn.

PD_D[0..15] — PD_D[0..15] <19>
PD_A[0..2] — PD_A[0..2] <19>

+3VS C451 0.1U_0402_16V4Z
<20> IDERST_CD# — IDERST_CD#
<7,17,18,20,26,27,31,35> PLT_RST# — PLT_RST#
U28 NC7SZ08P5X_NL_SC70-5

JP10

IDE_RST# — PD_D7 — PD_D6 — PD_D5 — PD_D4 — PD_D3 — PD_D2 — PD_D1 — PD_D0
PD_D8 — PD_D9 — PD_D10 — PD_D11 — PD_D12 — PD_D13 — PD_D14 — PD_D15
PD_DREQ — PD_IOR# — PD_DREQ <19> — PD_IOR# <19>
PD_DACK# — PD_DACK# <19>
PD_DIAG# — PD_A2 — PD_CS#3 — PD_CS#3 <19>
<19> PD_IOW# — PD_IOW#
<19> PD_IORDY — PD_IORDY
<19> PD_IRQ — PD_IRQ
PD_A1
PD_A0
<19> PD_CS#1 — PD_CS#1
PIDE_LED#

R315 100K_0402_5% +5VS
+5VS C441 0.1U_0402_16V4Z, C440 10U_0805_10V4Z, C426 10U_0805_10V4Z, C422 1U_0603_10V4Z

+5VS R307 @475_0402_1% — PRI_CSEL
R306 475_0402_1% SATA@

OCTEK_CDR-50DY1G
ME@

**IDE_CSEL**
**Grounding for Master (When use SATA HDD)**
**Open or High for Slaver (Normal)**

| Security Classification | Compal Secret Data | | |
|---|---|---|---|
| Issued Date | 2005/10/06 | Deciphered Date | 2006/10/06 |

THIS SHEET OF ENGINEERING DRAWING IS THE PROPRIETARY PROPERTY OF COMPAL ELECTRONICS, INC. AND CONTAINS CONFIDENTIAL AND TRADE SECRET INFORMATION. THIS SHEET MAY NOT BE TRANSFERRED FROM THE CUSTODY OF THE COMPETENT DIVISION OF R&D DEPARTMENT EXCEPT AS AUTHORIZED BY COMPAL ELECTRONICS, INC. NEITHER THIS SHEET NOR THE INFORMATION IT CONTAINS MAY BE USED BY OR DISCLOSED TO ANY THIRD PARTY WITHOUT PRIOR WRITTEN CONSENT OF COMPAL ELECTRONICS, INC.

**Compal Electronics, Inc.**

Title: **HDD & CDROM**

Size: Custom | Document Number: **HEL80 LA-3161P** | Rev: 0.2

Date: Thursday, February 23, 2006 | Sheet 22 of 43

http://laptopblue.vn/

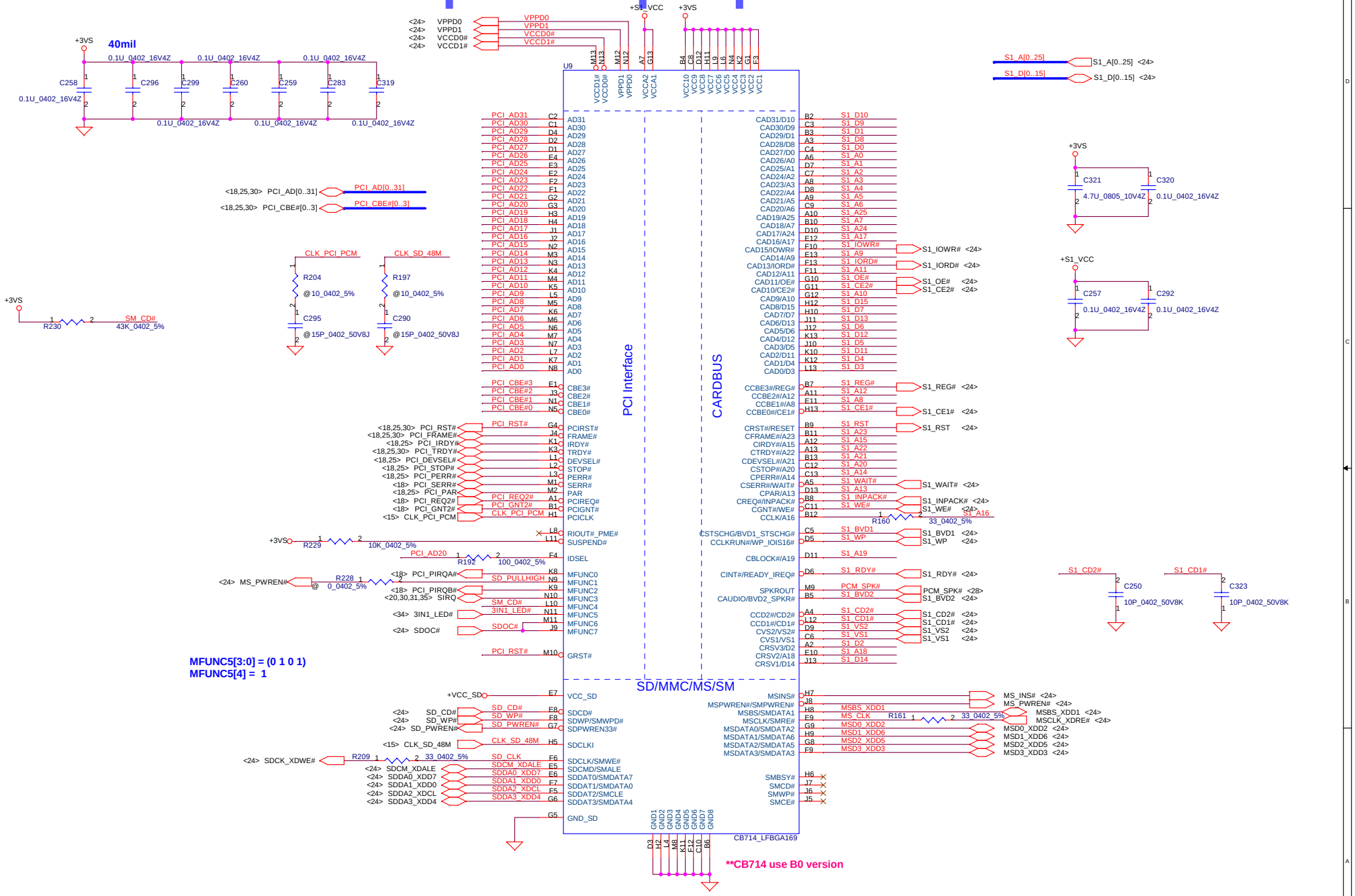


| Security Classification | Compal Secret Data | | |
|---|---|---|---|
| Issued Date | 2005/06/20 | Deciphered Date | 2006/06/20 |

THIS SHEET OF ENGINEERING DRAWING IS THE PROPRIETARY PROPERTY OF COMPAL ELECTRONICS, INC. AND CONTAINS CONFIDENTIAL AND TRADE SECRET INFORMATION. THIS SHEET MAY NOT BE TRANSFERRED FROM THE CUSTODY OF THE COMPETENT DIVISION OF R&D DEPARTMENT EXCEPT AS AUTHORIZED BY COMPAL ELECTRONICS, INC. NEITHER THIS SHEET NOR THE INFORMATION IT CONTAINS MAY BE USED BY OR DISCLOSED TO ANY THIRD PARTY WITHOUT PRIOR WRITTEN CONSENT OF COMPAL ELECTRONICS, INC.

**Compal Electronics, Inc.**

Title: Cardbus Controller CB714

Size: Custom | Document Number: HEL80 LA-3161P | Rev: 0.2

Date: Thursday, February 23, 2006 | Sheet 23 of 43

http://laptopblue.vn/

# PCMCIA Socket

**Note : 11/10 modify library to meet spec**

**pn: SP01000IC00**

**02/17 modify footprint to FOX_1CA41521-EL-4F_68P_LT**

## PCMCIA Power Control

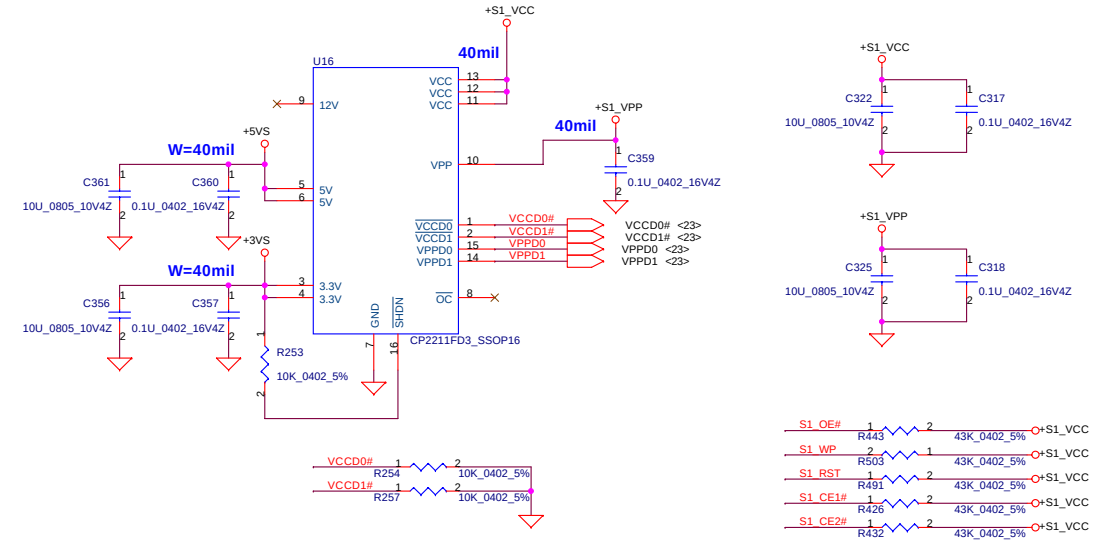


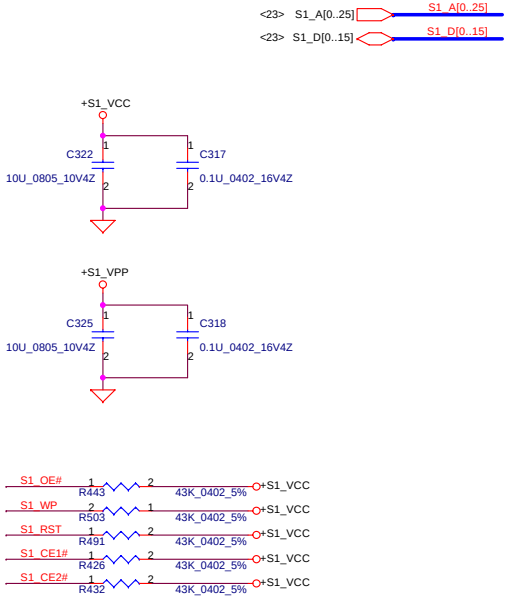


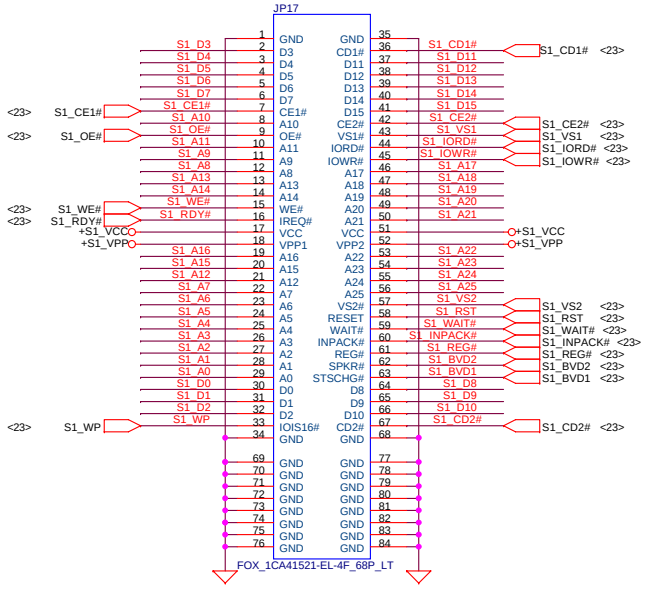


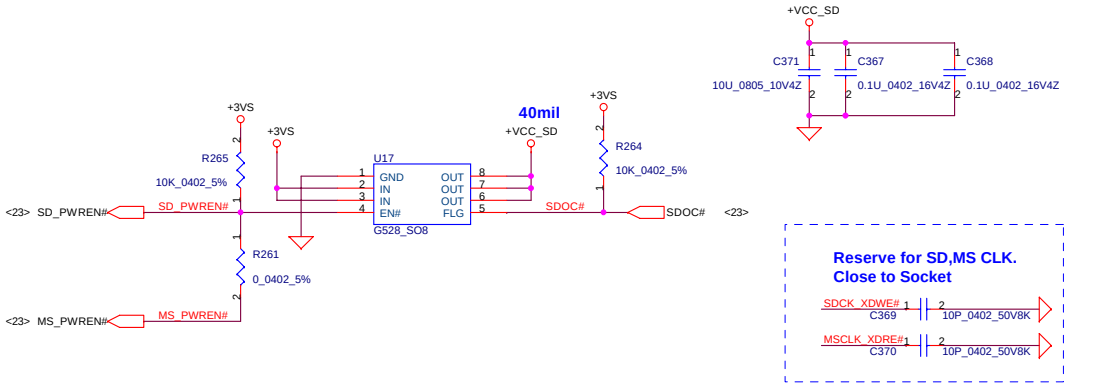


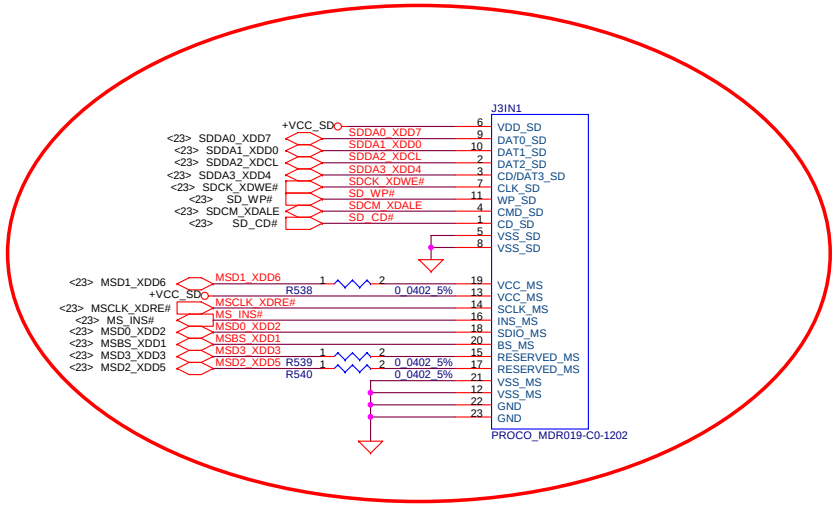


**12/20 modified**

| Security Classification | Compal Secret Data | | |
|---|---|---|---|
| Issued Date | 2005/06/20 | Deciphered Date | 2006/06/20 |

THIS SHEET OF ENGINEERING DRAWING IS THE PROPRIETARY PROPERTY OF COMPAL ELECTRONICS, INC. AND CONTAINS CONFIDENTIAL AND TRADE SECRET INFORMATION. THIS SHEET MAY NOT BE TRANSFERRED FROM THE CUSTODY OF THE COMPETENT DIVISION OF R&D DEPARTMENT EXCEPT AS AUTHORIZED BY COMPAL ELECTRONICS, INC. NEITHER THIS SHEET NOR THE INFORMATION IT CONTAINS MAY BE USED BY OR DISCLOSED TO ANY THIRD PARTY WITHOUT PRIOR WRITTEN CONSENT OF COMPAL ELECTRONICS, INC.

**Compal Electronics, Inc.**

Title: PCMCIA Socket

Size: Custom | Document Number: HEL80 LA-3161P | Rev: 0.2

Date: Thursday, February 23, 2006 | Sheet 24 of 43

http://laptopblue.vn/

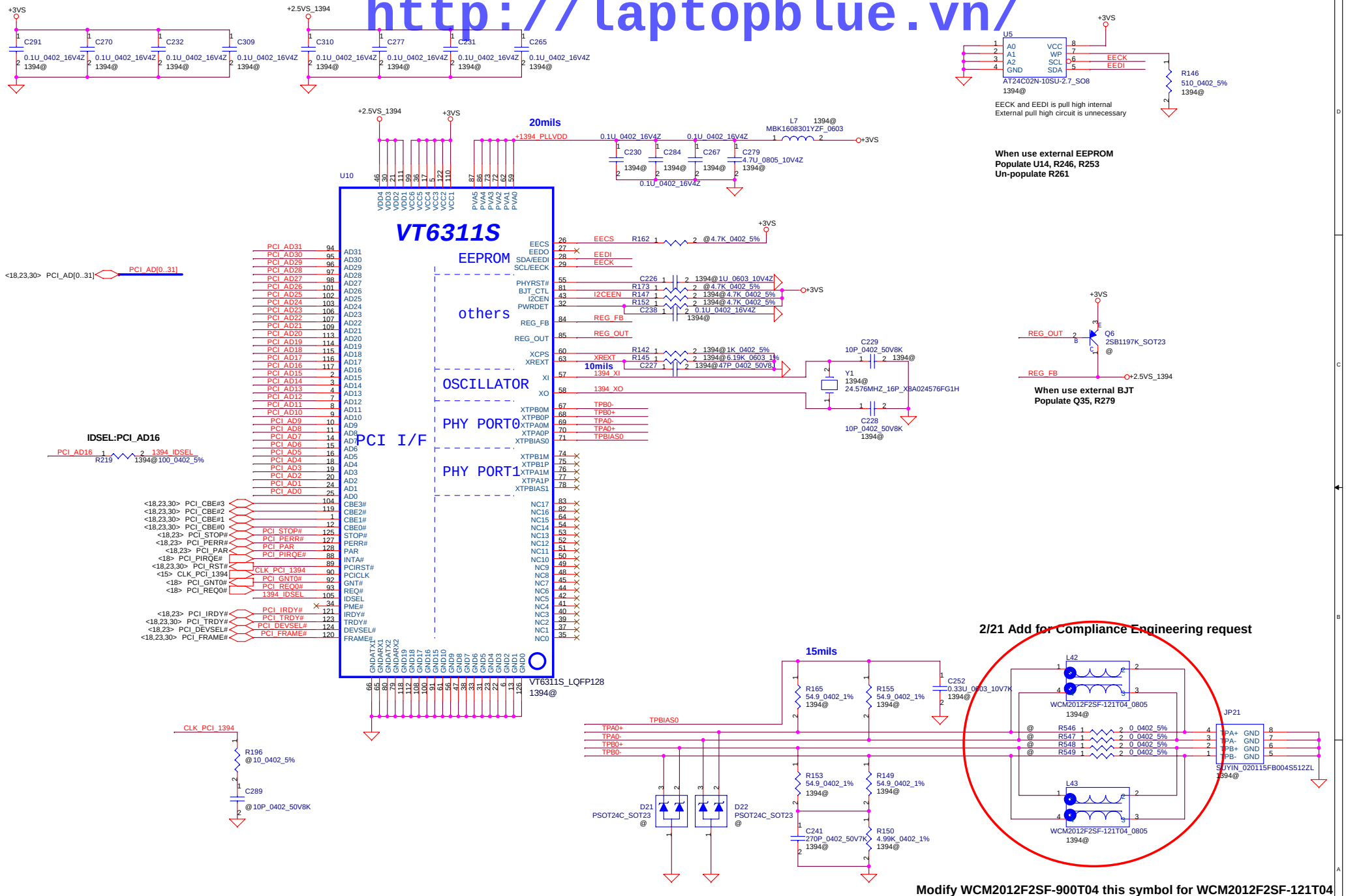


**Note : This page copied from HBL50**

| Security Classification | Compal Secret Data | | |
|---|---|---|---|
| Issued Date | 2005/06/20 | Deciphered Date | 2006/06/20 |

THIS SHEET OF ENGINEERING DRAWING IS THE PROPRIETARY PROPERTY OF COMPAL ELECTRONICS, INC. AND CONTAINS CONFIDENTIAL AND TRADE SECRET INFORMATION. THIS SHEET MAY NOT BE TRANSFERED FROM THE CUSTODY OF THE COMPETENT DIVISION OF R&D DEPARTMENT EXCEPT AS AUTHORIZED BY COMPAL ELECTRONICS, INC. NEITHER THIS SHEET NOR THE INFORMATION IT CONTAINS MAY BE USED BY OR DISCLOSED TO ANY THIRD PARTY WITHOUT PRIOR WRITTEN CONSENT OF COMPAL ELECTRONICS, INC.

**Compal Electronics, Inc.**

Title: IEEE1394 VIA VT6311S

Size: Custom | Document Number: HEL80 LA-3161P | Rev: 0.2

Date: Thursday, February 23, 2006 | Sheet 25 of 43

http://laptopblue.vn/

PN : SA00000TL00 (QFN64 Lead Free)

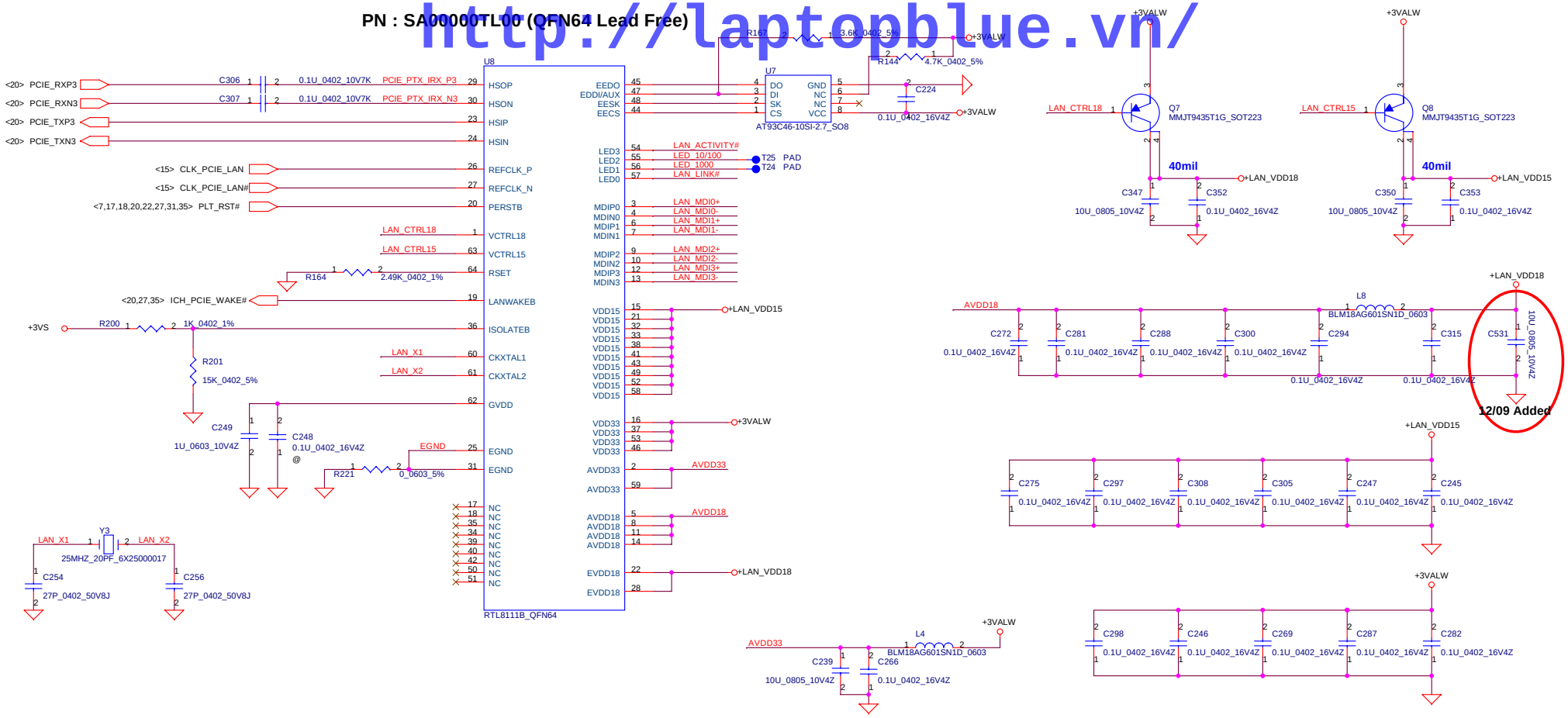


## GbE Transformer: GST5009 (SP050005610) MY

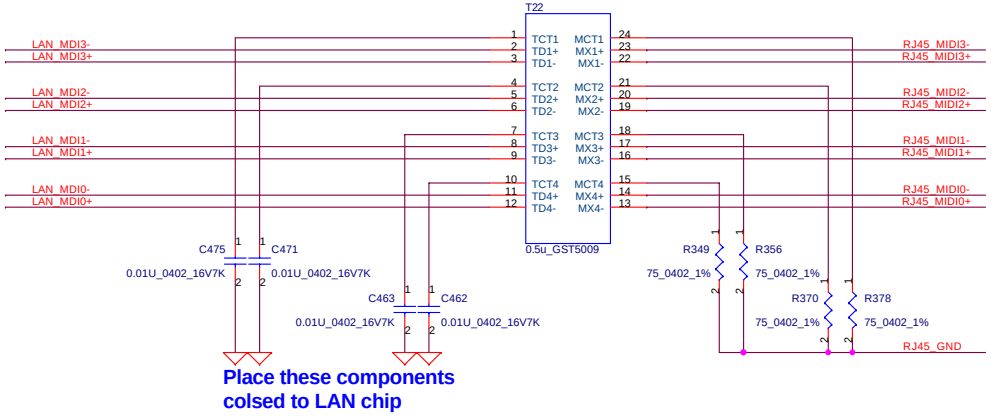


## LAN Conn.

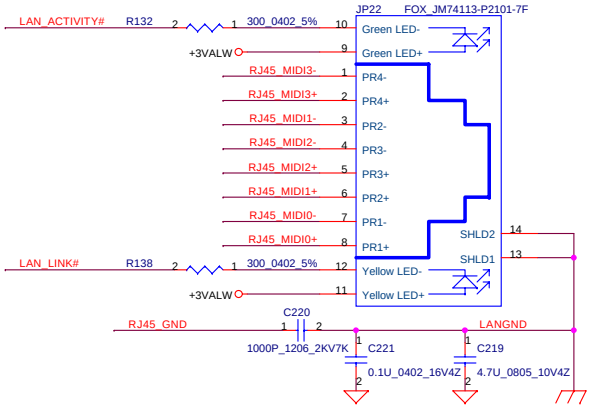


| | |
|---|---|
| Title | LAN REALTEK RTL8111B |
| Size | |
| Document Number | HEL80 LA-3161P |
| Rev | 0.2 |
| Date: Thursday, February 23, 2006 | Sheet 26 of 43 |

Compal Electronics, Inc.

THIS SHEET OF ENGINEERING DRAWING IS THE PROPRIETARY PROPERTY OF COMPAL ELECTRONICS, INC. AND CONTAINS CONFIDENTIAL AND TRADE SECRET INFORMATION. THIS SHEET MAY NOT BE TRANSFERED FROM THE CUSTODY OF THE COMPETENT DIVISION OF R&D DEPARTMENT EXCEPT AS AUTHORIZED BY COMPAL ELECTRONICS, INC. NEITHER THIS SHEET NOR THE INFORMATION IT CONTAINS MAY BE USED BY OR DISCLOSED TO ANY THIRD PARTY WITHOUT PRIOR WRITTEN CONSENT OF COMPAL ELECTRONICS, INC.

http://laptopblue.vn/

## Mini-Express Card(Slot 1-WLAN)

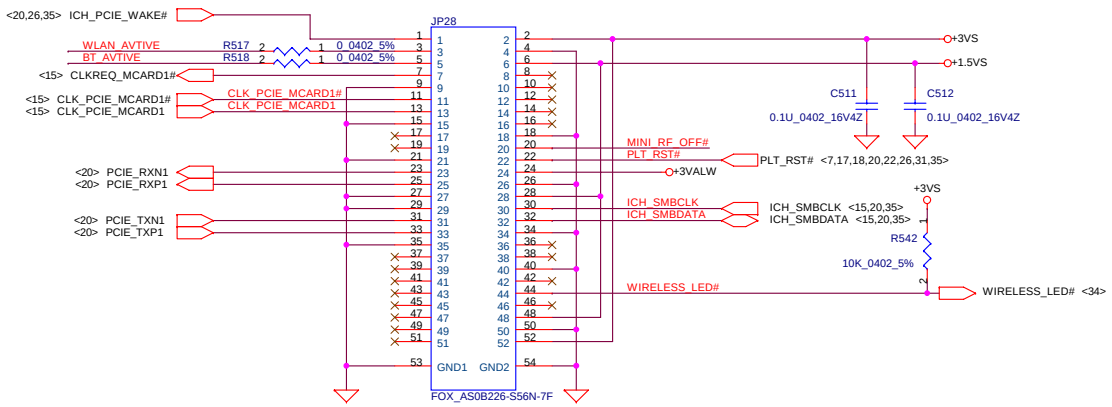


## Mini-Express Card(Slot 2-TV)

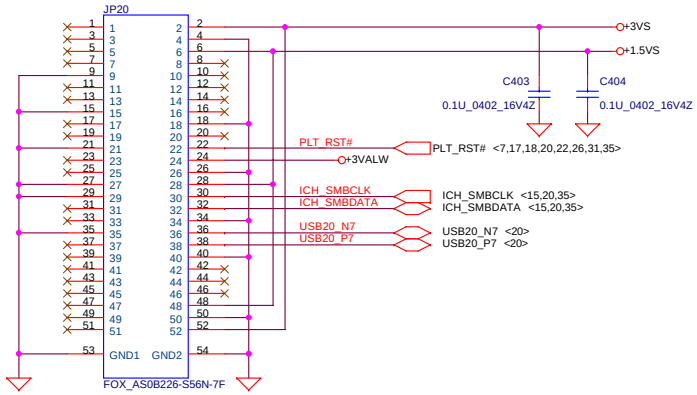


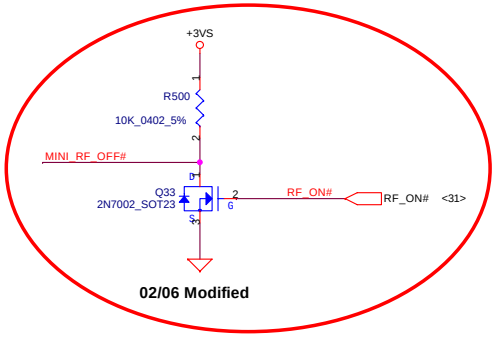


02/06 Modified

## MDC CONN.

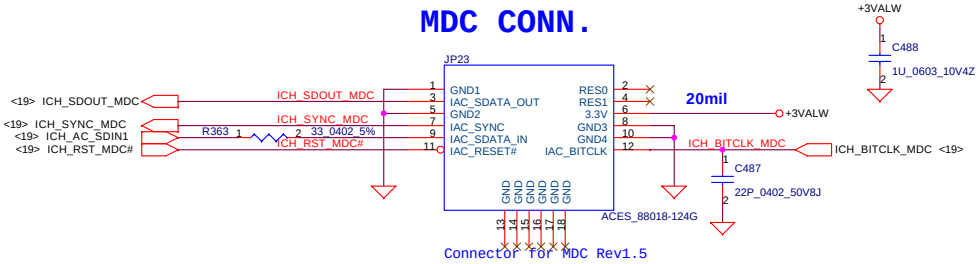


Connector for MDC Rev1.5

11/9 Modify pn to SP01000FE00

## BT MODULE CONN

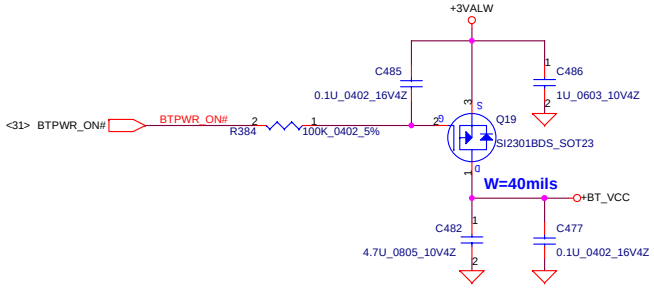


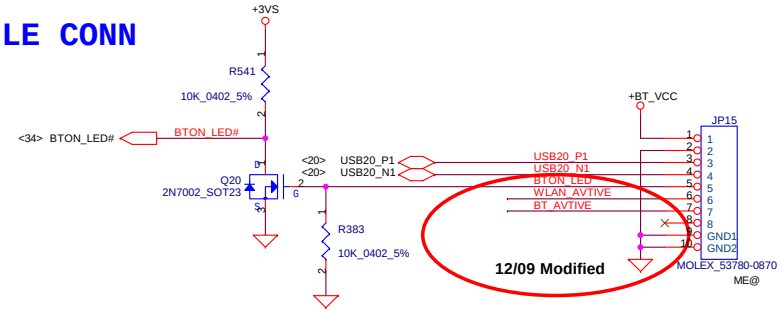


12/09 Modified

| Security Classification | Compal Secret Data | | |
|---|---|---|---|
| Issued Date | 2005/10/06 | Deciphered Date | 2006/10/06 |

THIS SHEET OF ENGINEERING DRAWING IS THE PROPRIETARY PROPERTY OF COMPAL ELECTRONICS, INC. AND CONTAINS CONFIDENTIAL AND TRADE SECRET INFORMATION. THIS SHEET MAY NOT BE TRANSFERED FROM THE CUSTODY OF THE COMPETENT DIVISION OF R&D DEPARTMENT EXCEPT AS AUTHORIZED BY COMPAL ELECTRONICS, INC. NEITHER THIS SHEET NOR THE INFORMATION IT CONTAINS MAY BE USED BY OR DISCLOSED TO ANY THIRD PARTY WITHOUT PRIOR WRITTEN CONSENT OF COMPAL ELECTRONICS, INC.

**Compal Electronics, Inc.**

Title: **Mini Card / MDC CONN**

Size: Custom | Document Number: HEL80/81 LA-3161P | Rev: 0.2

Date: Thursday, February 23, 2006 | Sheet 27 of 43

http://laptopblue.vn/

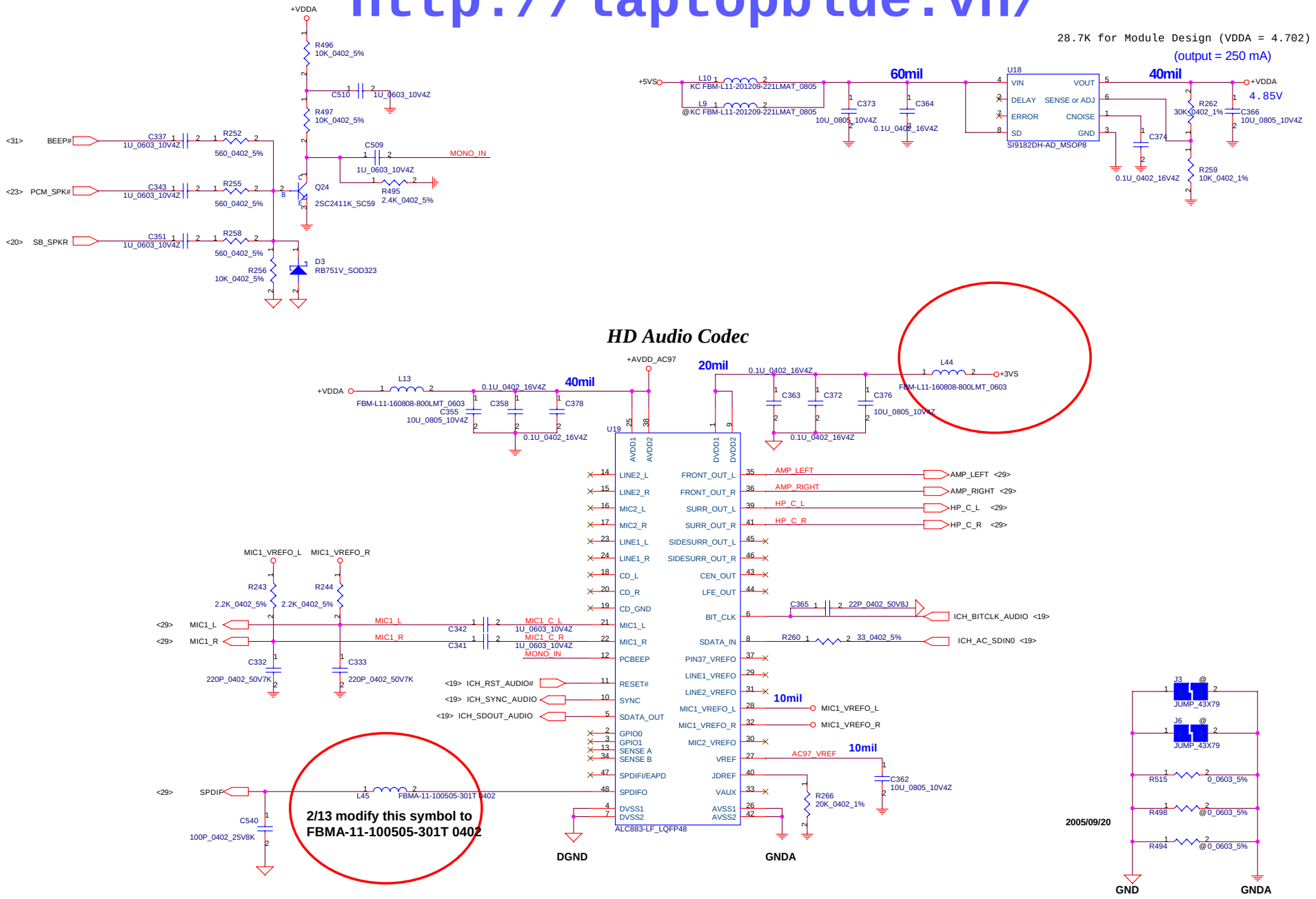


| Security Classification | Compal Secret Data | | |
|---|---|---|---|
| Issued Date | 2005/10/06 | Deciphered Date | 2006/10/06 |

THIS SHEET OF ENGINEERING DRAWING IS THE PROPRIETARY PROPERTY OF COMPAL ELECTRONICS, INC. AND CONTAINS CONFIDENTIAL AND TRADE SECRET INFORMATION. THIS SHEET MAY NOT BE TRANSFERED FROM THE CUSTODY OF THE COMPETENT DIVISION OF R&D DEPARTMENT EXCEPT AS AUTHORIZED BY COMPAL ELECTRONICS, INC. NEITHER THIS SHEET NOR THE INFORMATION IT CONTAINS MAY BE USED BY OR DISCLOSED TO ANY THIRD PARTY WITHOUT PRIOR WRITTEN CONSENT OF COMPAL ELECTRONICS, INC.

**Compal Electronics, Inc.**

Title: **HD CODEC ALC883**

Size: Custom | Document Number: HEL80 LA-3161P | Rev: 0.2

Date: Thursday, February 23, 2006 | Sheet 28 of 43

http://laptopblue.vn/

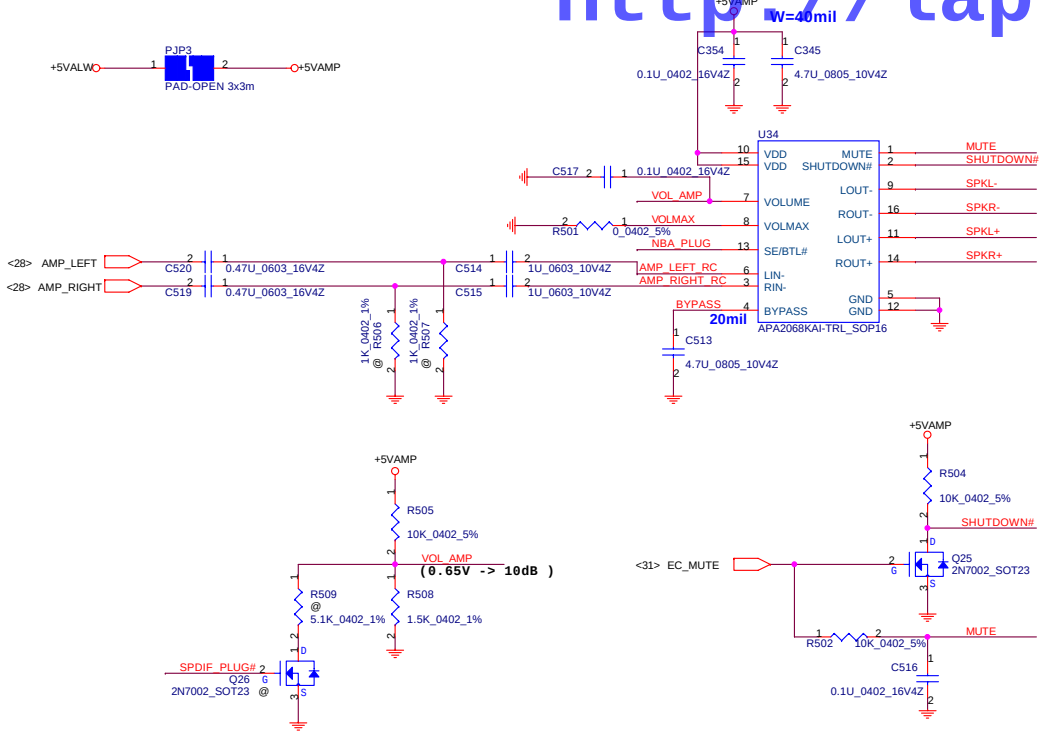


## 11/10 modify pn to SP02000G100

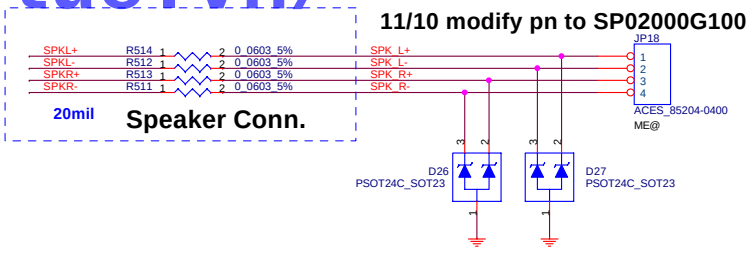


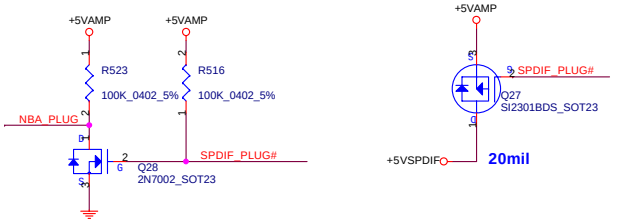


| | SPDIF_PLUG# | NBA_PLUG |
|---|---|---|
| Un-Plug | H | L |
| HP_Plug_In | L | H |
| SPDIF_Plug_In | L | H |

## Audio Jack/USB Conn.

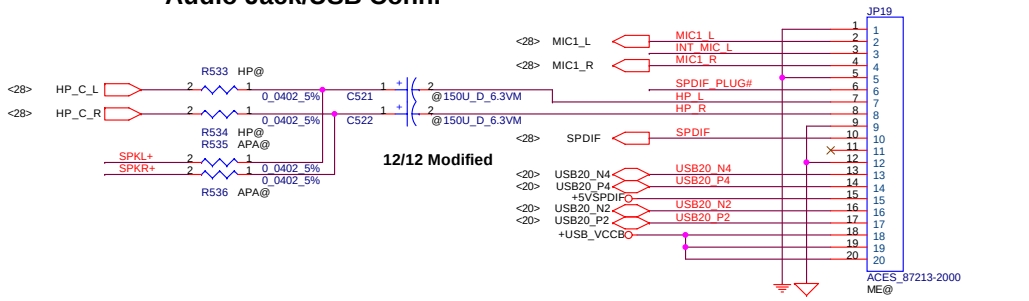


11/10 Modify pn to SP02000BJ00

## HEAD PHONE AMP

**HPF Fc = 338Hz**

**R=1K, C=0.22U for HBQ60**

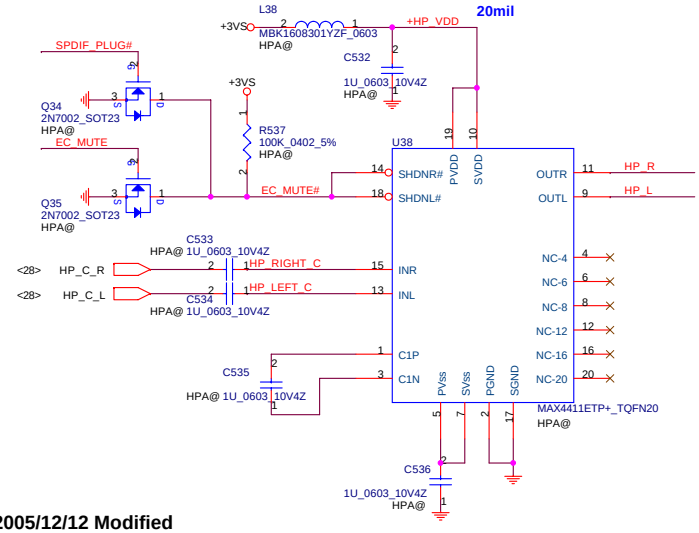


2005/12/12 Modified

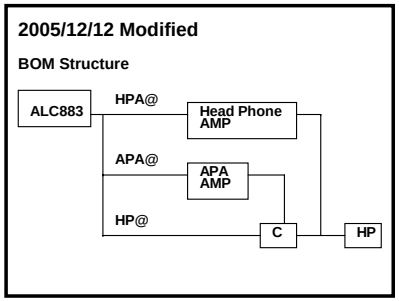


## Int MIC Conn.

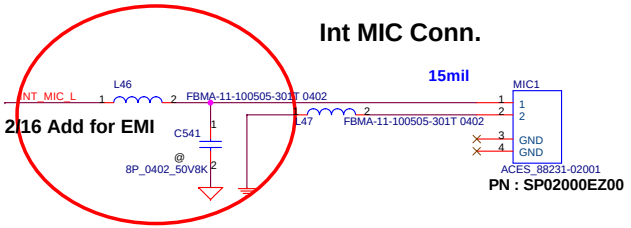


PN : SP02000EZ00

| Security Classification | Compal Secret Data | | |
|---|---|---|---|
| Issued Date | 2005/10/06 | Deciphered Date | 2006/10/06 |

THIS SHEET OF ENGINEERING DRAWING IS THE PROPRIETARY PROPERTY OF COMPAL ELECTRONICS, INC. AND CONTAINS CONFIDENTIAL AND TRADE SECRET INFORMATION. THIS SHEET MAY NOT BE TRANSFERED FROM THE CUSTODY OF THE COMPETENT DIVISION OF R&D DEPARTMENT EXCEPT AS AUTHORIZED BY COMPAL ELECTRONICS, INC. NEITHER THIS SHEET NOR THE INFORMATION IT CONTAINS MAY BE USED BY OR DISCLOSED TO ANY THIRD PARTY WITHOUT PRIOR WRITTEN CONSENT OF COMPAL ELECTRONICS, INC.

Compal Electronics, Inc.

Title: AMP & Audio Jack

Size: Custom | Document Number: HEL80 LA-3161P | Rev: 0.2

Date: Thursday, February 23, 2006 | Sheet 29 of 43

http://laptopblue.vn/

## INT_KBD CONN.( TYPE "D" KB)

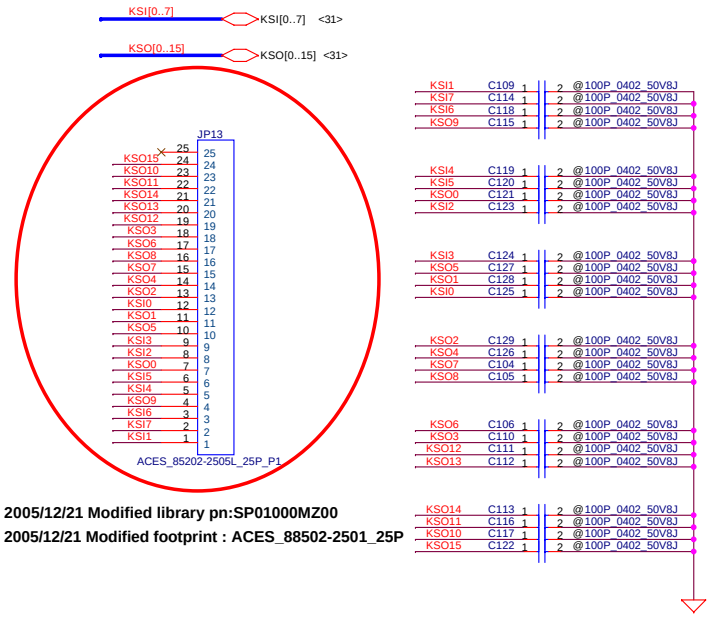


**2005/12/21 Modified library pn:SP01000MZ00**
**2005/12/21 Modified footprint : ACES_88502-2501_25P**

## Power BTN

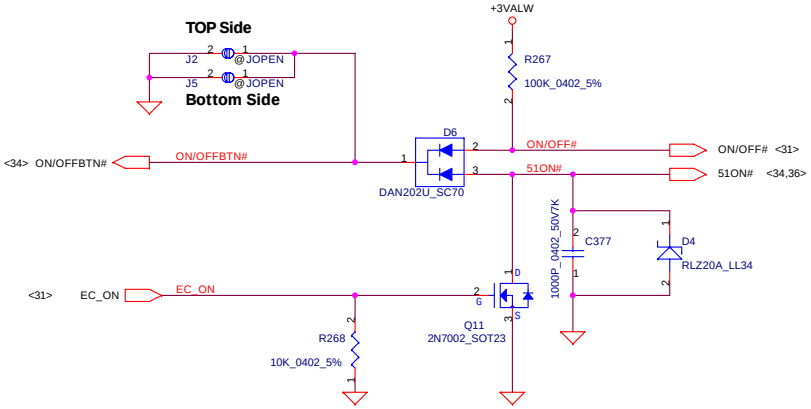


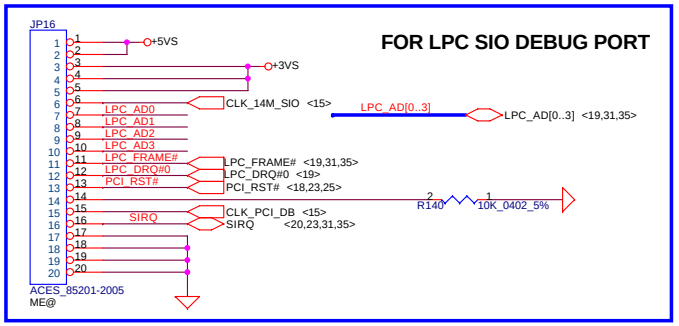


**Not lead free**

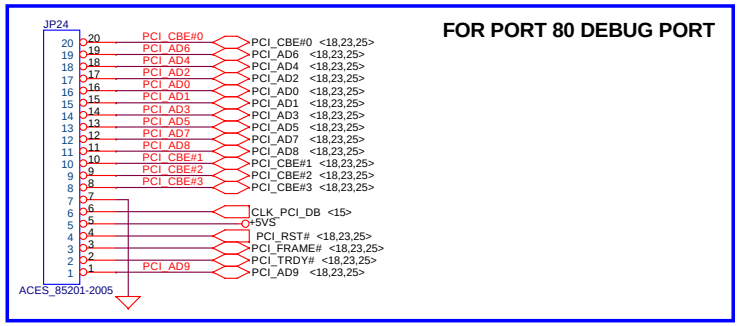


**Not lead free**

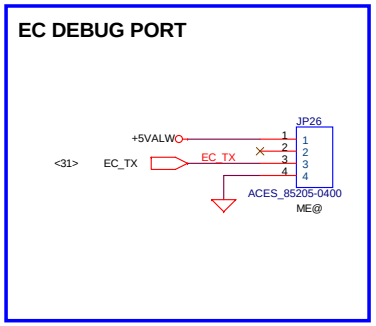


| Security Classification | Compal Secret Data | | |
|---|---|---|---|
| Issued Date | 2005/10/06 | Deciphered Date | 2006/10/06 |

THIS SHEET OF ENGINEERING DRAWING IS THE PROPRIETARY PROPERTY OF COMPAL ELECTRONICS, INC. AND CONTAINS CONFIDENTIAL AND TRADE SECRET INFORMATION. THIS SHEET MAY NOT BE TRANSFERRED FROM THE CUSTODY OF THE COMPETENT DIVISION OF R&D DEPARTMENT EXCEPT AS AUTHORIZED BY COMPAL ELECTRONICS, INC. NEITHER THIS SHEET NOR THE INFORMATION IT CONTAINS MAY BE USED BY OR DISCLOSED TO ANY THIRD PARTY WITHOUT PRIOR WRITTEN CONSENT OF COMPAL ELECTRONICS, INC.

**Compal Electronics, Inc.**

Title: **KBD,ON/OFF,T/P,LED/B,DEBUG**

Size: Custom | Document Number: **HEL80 LA-3161P** | Rev: 0.2

Date: Thursday, February 23, 2006 | Sheet 30 of 43

http://laptopblue.vn/

Analog Board ID definition,
Please see page 3.

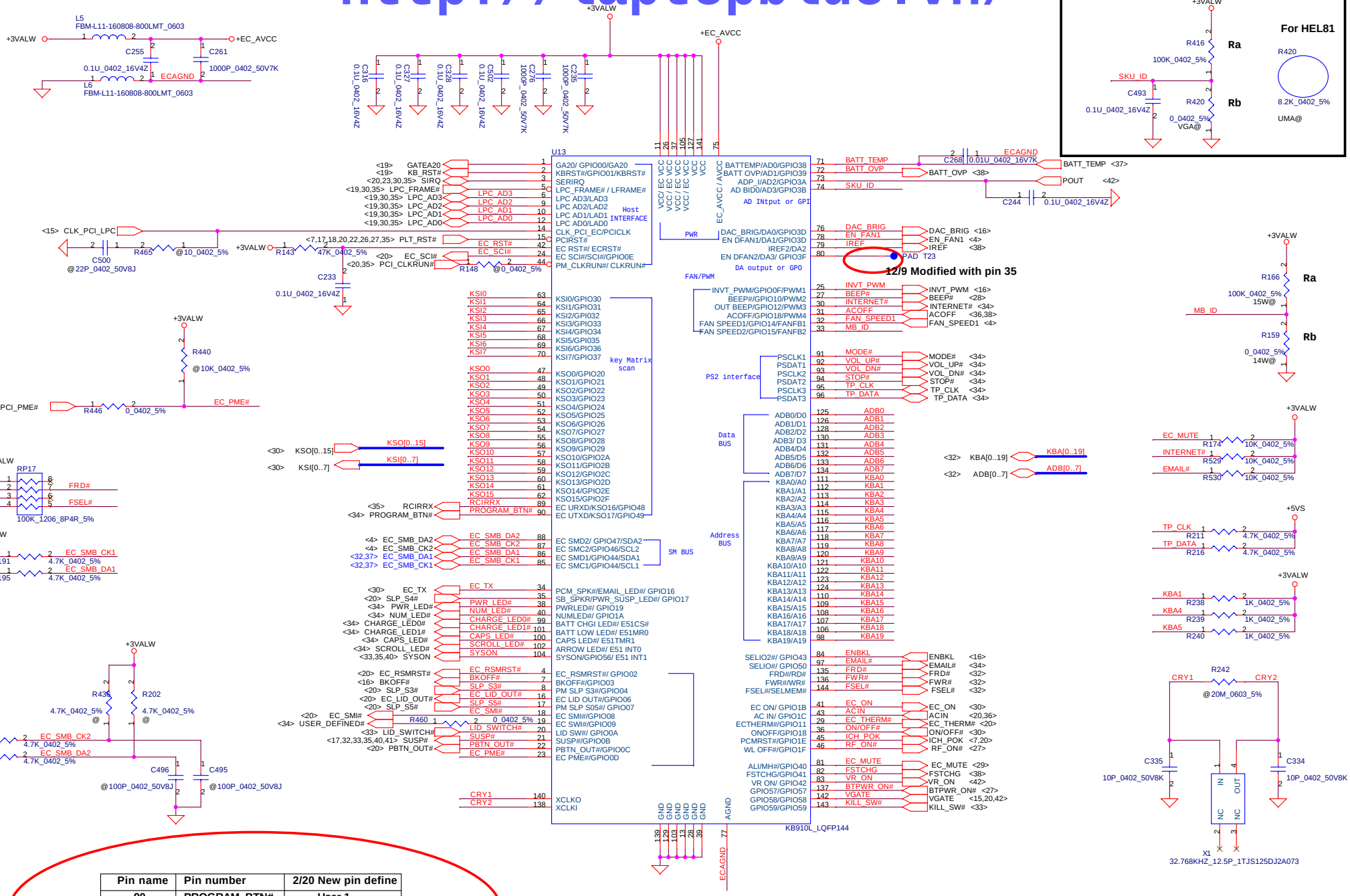


| Pin name | Pin number | 2/20 New pin define |
|---|---|---|
| 90 | PROGRAM_BTN# | User-1 |
| 30 | INTERNET# | User-2 |
| 97 | EMAIL# | INTERNET |
| 19 | USER_DEFINED# | EMAIL |

**2/20 New added**

| Security Classification | Compal Secret Data | | |
|---|---|---|---|
| Issued Date | 2005/10/06 | Deciphered Date | 2006/10/06 |

THIS SHEET OF ENGINEERING DRAWING IS THE PROPRIETARY PROPERTY OF COMPAL ELECTRONICS, INC. AND CONTAINS CONFIDENTIAL AND TRADE SECRET INFORMATION. THIS SHEET MAY NOT BE TRANSFERED FROM THE CUSTODY OF THE COMPETENT DIVISION OF R&D DEPARTMENT EXCEPT AS AUTHORIZED BY COMPAL ELECTRONICS, INC. NEITHER THIS SHEET NOR THE INFORMATION IT CONTAINS MAY BE USED BY OR DISCLOSED TO ANY THIRD PARTY WITHOUT PRIOR WRITTEN CONSENT OF COMPAL ELECTRONICS, INC.

Compal Electronics, Inc.

Title: ENE-KB910L

Size: Custom | Document Number: HEL80 LA-3161P | Rev: 0.2

Date: Thursday, February 23, 2006 | Sheet 31 of 43

http://laptopblue.vn/

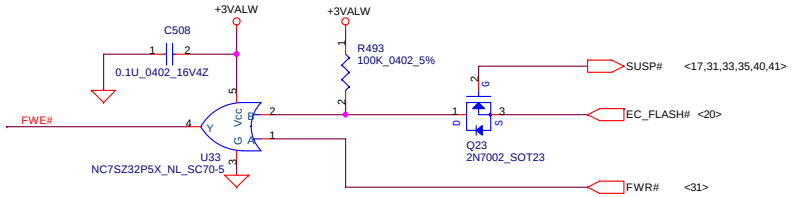


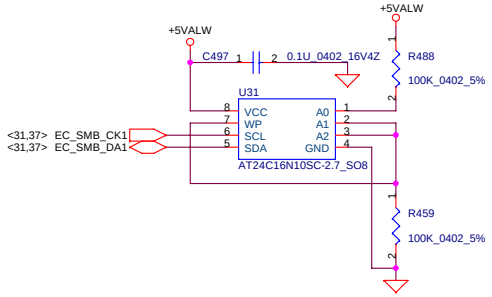


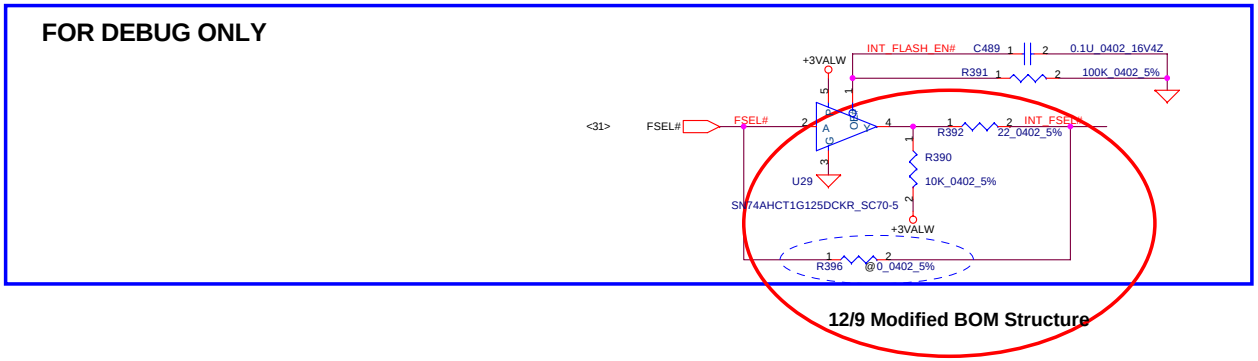


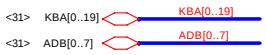


## 1MB Flash ROM

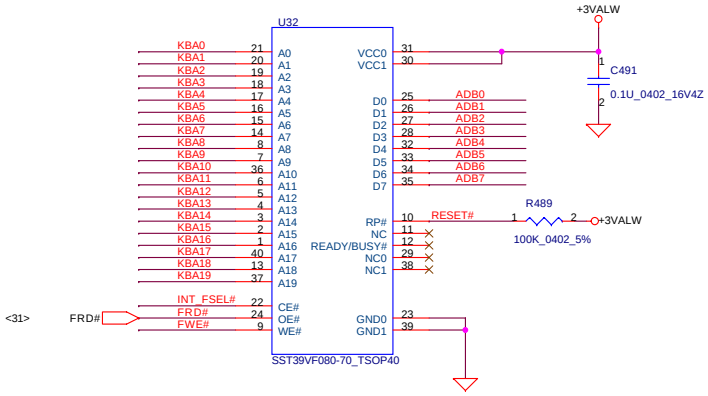


## 1MB ROM Socket

SB_INT_FLASH_SEL tie to ATI SB GPIO1 and pull down

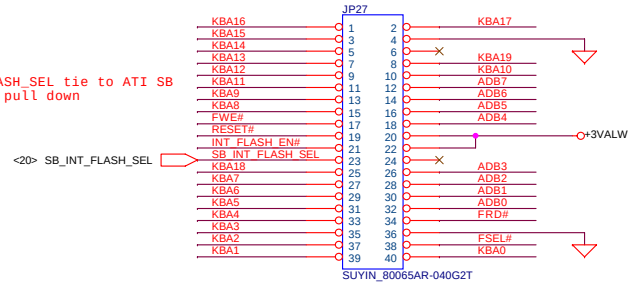


**Not Lead Free**

| Security Classification | Compal Secret Data | | |
|---|---|---|---|
| Issued Date | 2005/10/06 | Deciphered Date | 2006/10/06 |

THIS SHEET OF ENGINEERING DRAWING IS THE PROPRIETARY PROPERTY OF COMPAL ELECTRONICS, INC. AND CONTAINS CONFIDENTIAL AND TRADE SECRET INFORMATION. THIS SHEET MAY NOT BE TRANSFERED FROM THE CUSTODY OF THE COMPETENT DIVISION OF R&D DEPARTMENT EXCEPT AS AUTHORIZED BY COMPAL ELECTRONICS, INC. NEITHER THIS SHEET NOR THE INFORMATION IT CONTAINS MAY BE USED BY OR DISCLOSED TO ANY THIRD PARTY WITHOUT PRIOR WRITTEN CONSENT OF COMPAL ELECTRONICS, INC.

**Compal Electronics, Inc.**

Title: **BIOS & EC I/O Port**

Size: Custom | Document Number: **HEL80 LA-3161P** | Rev: 0.2

Date: Thursday, February 23, 2006 | Sheet 32 of 43

http://laptopblue.vn/

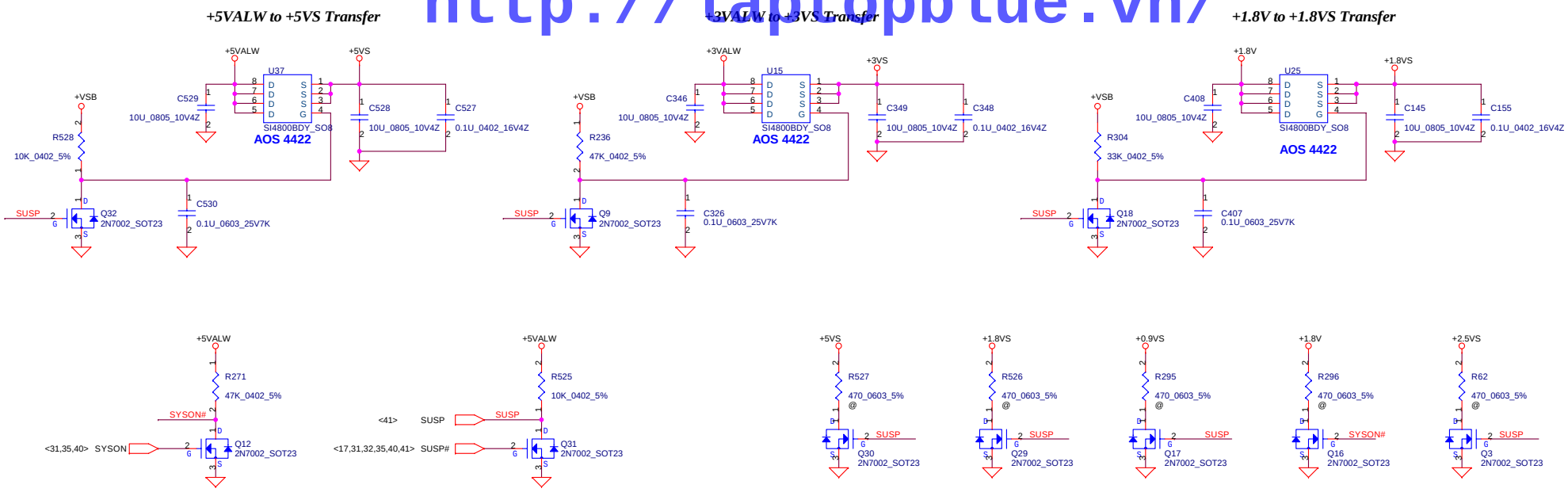


## LID Switch

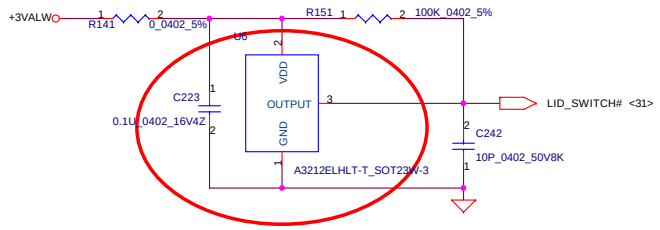


12/9 Change to SA032120010

## CMOS Camera Conn

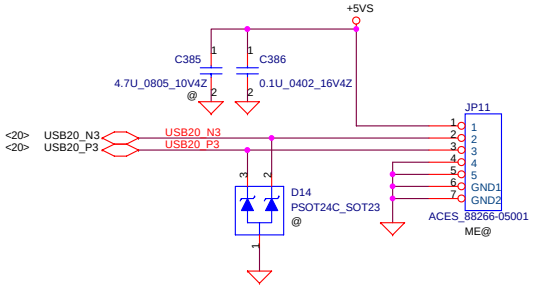


## Finger Print board + MP3 Module CONN.

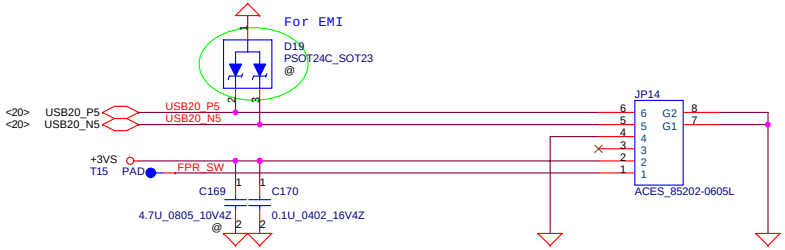


## Kill Switch

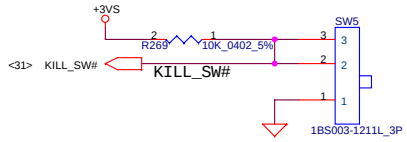


## ACES

| Security Classification | Compal Secret Data | | |
|---|---|---|---|
| Issued Date | 2005/10/06 | Deciphered Date | 2006/10/06 |

THIS SHEET OF ENGINEERING DRAWING IS THE PROPRIETARY PROPERTY OF COMPAL ELECTRONICS, INC. AND CONTAINS CONFIDENTIAL AND TRADE SECRET INFORMATION. THIS SHEET MAY NOT BE TRANSFERED FROM THE CUSTODY OF THE COMPETENT DIVISION OF R&D DEPARTMENT EXCEPT AS AUTHORIZED BY COMPAL ELECTRONICS, INC. NEITHER THIS SHEET NOR THE INFORMATION IT CONTAINS MAY BE USED BY OR DISCLOSED TO ANY THIRD PARTY WITHOUT PRIOR WRITTEN CONSENT OF COMPAL ELECTRONICS, INC.

**Compal Electronics, Inc.**

Title: **DC/DC Circuit**

Size: Custom | Document Number: **HEL80 LA-3161P** | Rev: 0.2

Date: Thursday, February 23, 2006 | Sheet 33 of 43

http://laptopblue.vn/

## USB Port

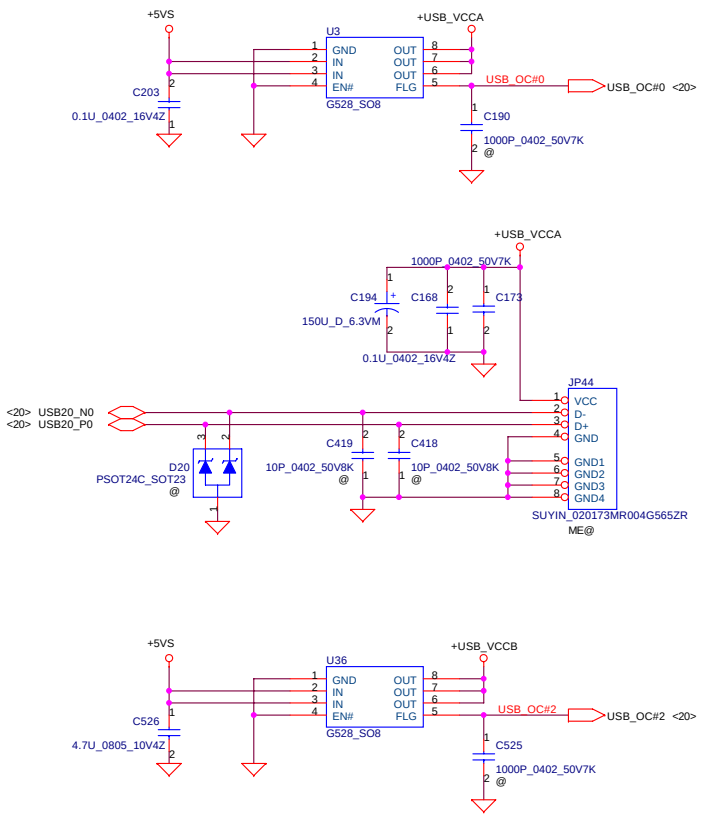


## Switch Board CONN.

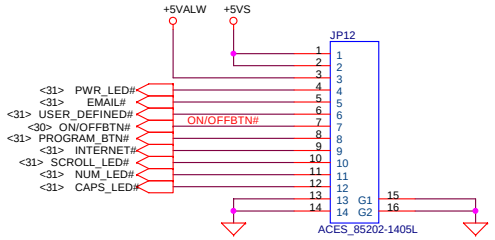


## T/P Board

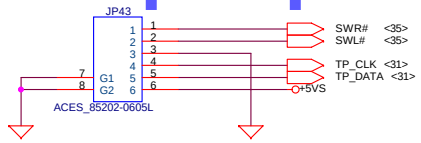


## IOMP Board

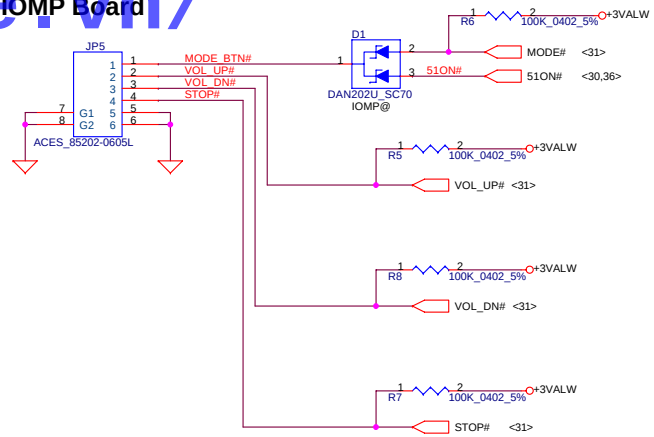


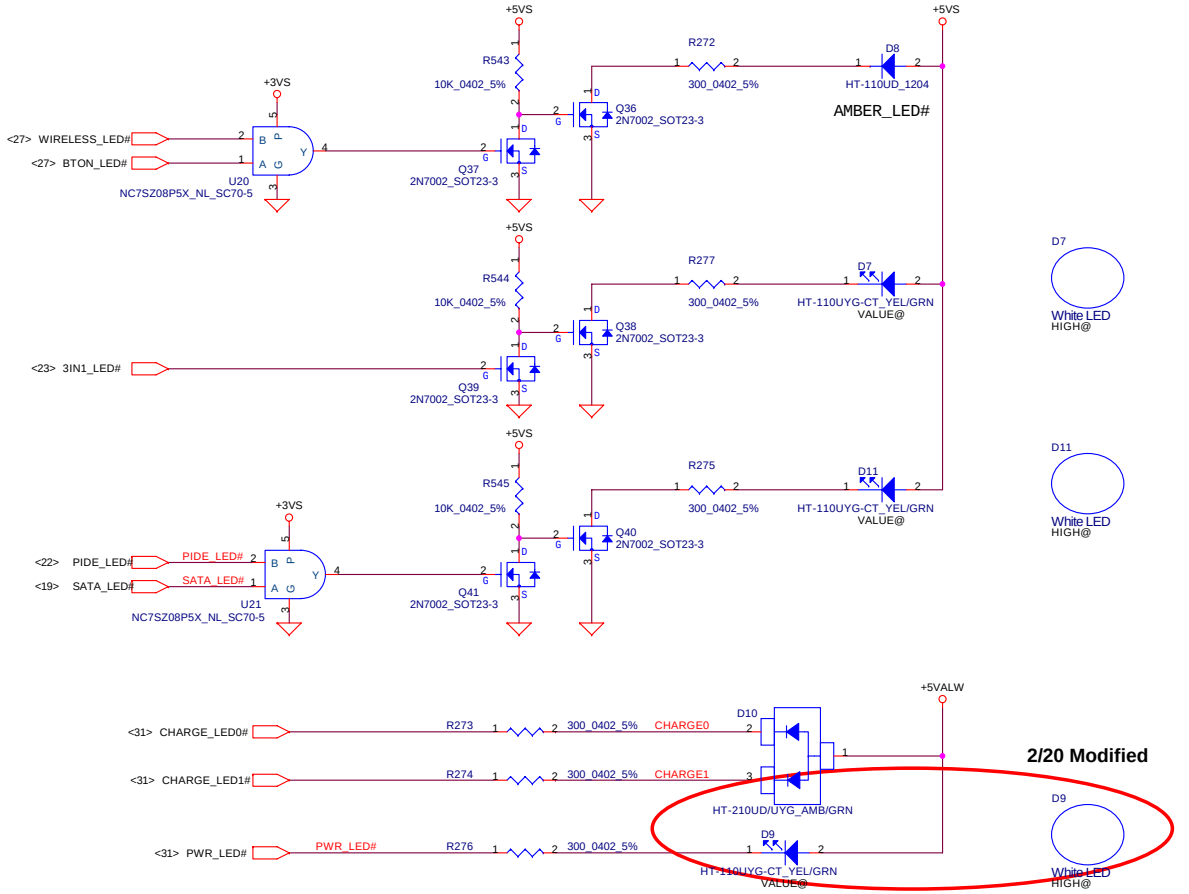


| Security Classification | Compal Secret Data | | |
|---|---|---|---|
| Issued Date | 2005/10/06 | Deciphered Date | 2006/10/06 |

THIS SHEET OF ENGINEERING DRAWING IS THE PROPRIETARY PROPERTY OF COMPAL ELECTRONICS, INC. AND CONTAINS CONFIDENTIAL AND TRADE SECRET INFORMATION. THIS SHEET MAY NOT BE TRANSFERED FROM THE CUSTODY OF THE COMPETENT DIVISION OF R&D DEPARTMENT EXCEPT AS AUTHORIZED BY COMPAL ELECTRONICS, INC. NEITHER THIS SHEET NOR THE INFORMATION IT CONTAINS MAY BE USED BY OR DISCLOSED TO ANY THIRD PARTY WITHOUT PRIOR WRITTEN CONSENT OF COMPAL ELECTRONICS, INC.

**Compal Electronics, Inc.**

Title: **INDICATE LED**

Size: Custom | Document Number: HEL80 LA-3161P | Rev: 0.2

Date: Thursday, February 23, 2006 | Sheet 34 of 43

http://laptopblue.vn/

## New Card Power Switch

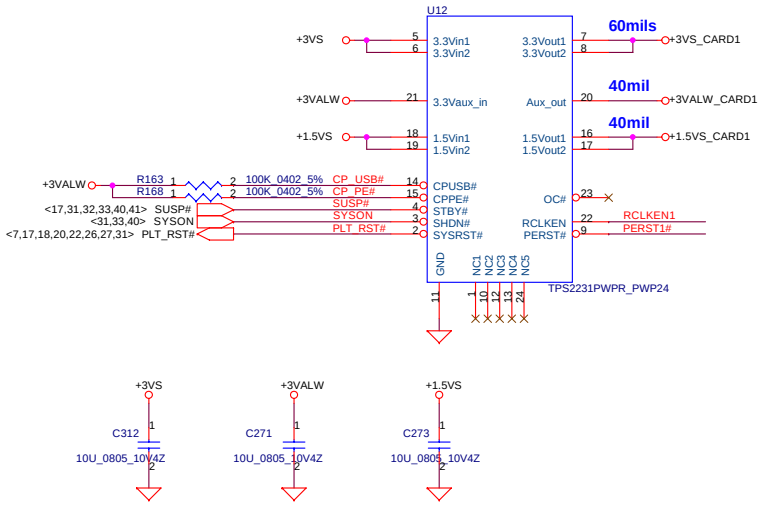


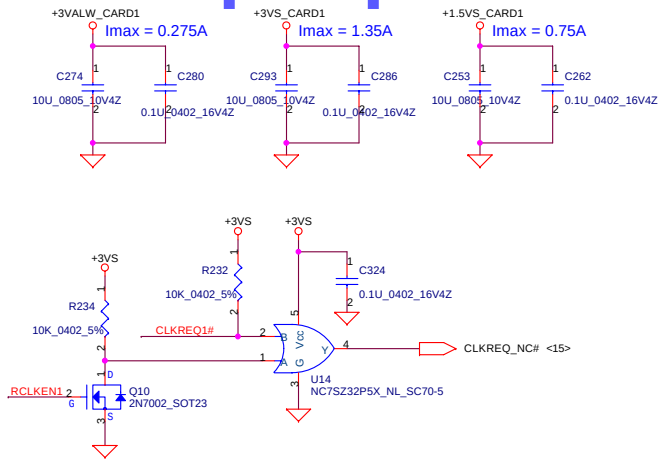


## New Card Socket (Left)

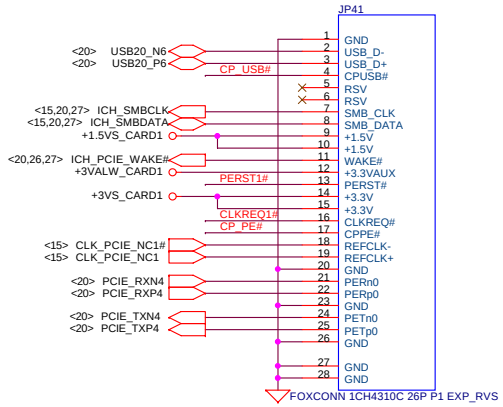


(NEW)

2005/11/4 Modified library pn:SP02000JC00

2005/12/9 Modified footprint to FOX_1CX43201_26P_LB

## CIR

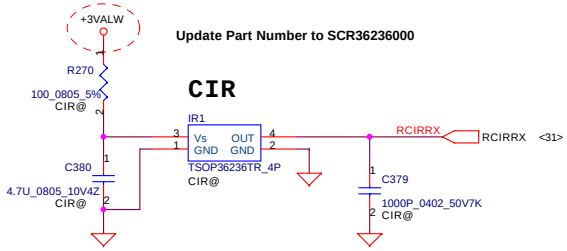


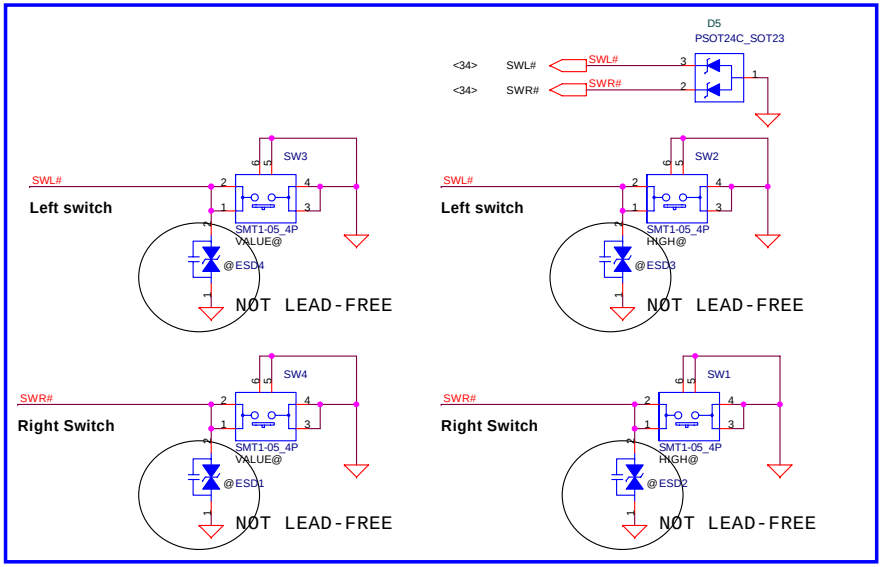


## TPM 1.2

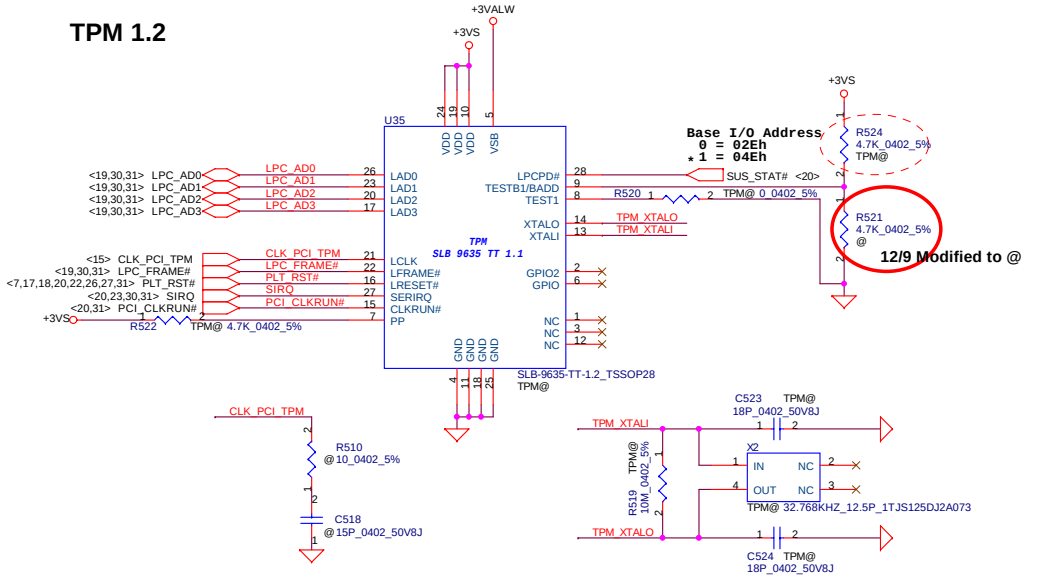


**Note : TPM IC Lead free status is MN**

| Security Classification | Compal Secret Data | | |
|---|---|---|---|
| Issued Date | 2005/10/06 | Deciphered Date | 2006/10/06 |

THIS SHEET OF ENGINEERING DRAWING IS THE PROPRIETARY PROPERTY OF COMPAL ELECTRONICS, INC. AND CONTAINS CONFIDENTIAL AND TRADE SECRET INFORMATION. THIS SHEET MAY NOT BE TRANSFERED FROM THE CUSTODY OF THE COMPETENT DIVISION OF R&D DEPARTMENT EXCEPT AS AUTHORIZED BY COMPAL ELECTRONICS, INC. NEITHER THIS SHEET NOR THE INFORMATION IT CONTAINS MAY BE USED BY OR DISCLOSED TO ANY THIRD PARTY WITHOUT PRIOR WRITTEN CONSENT OF COMPAL ELECTRONICS, INC.

Compal Electronics, Inc.

Title: New card

Size: Custom | Document Number: HEL80 LA-3161P | Rev: 0.2

Date: Thursday, February 23, 2006 | Sheet 35 of 43

http://laptopplus.vn/

**ACIN**

| Precharge detector | Min. | typ. | Max. |
|---|---|---|---|
| H-->L | 14.589V | 14.84V | 15.243V |
| L-->H | 15.562V | 15.97V | 16.388V |

**BATT ONLY**

| Precharge detector | Min. | typ. | Max. |
|---|---|---|---|
| H-->L | 6.138V | 6.214V | 6.359V |
| L-->H | 7.196V | 7.349V | 7.505V |

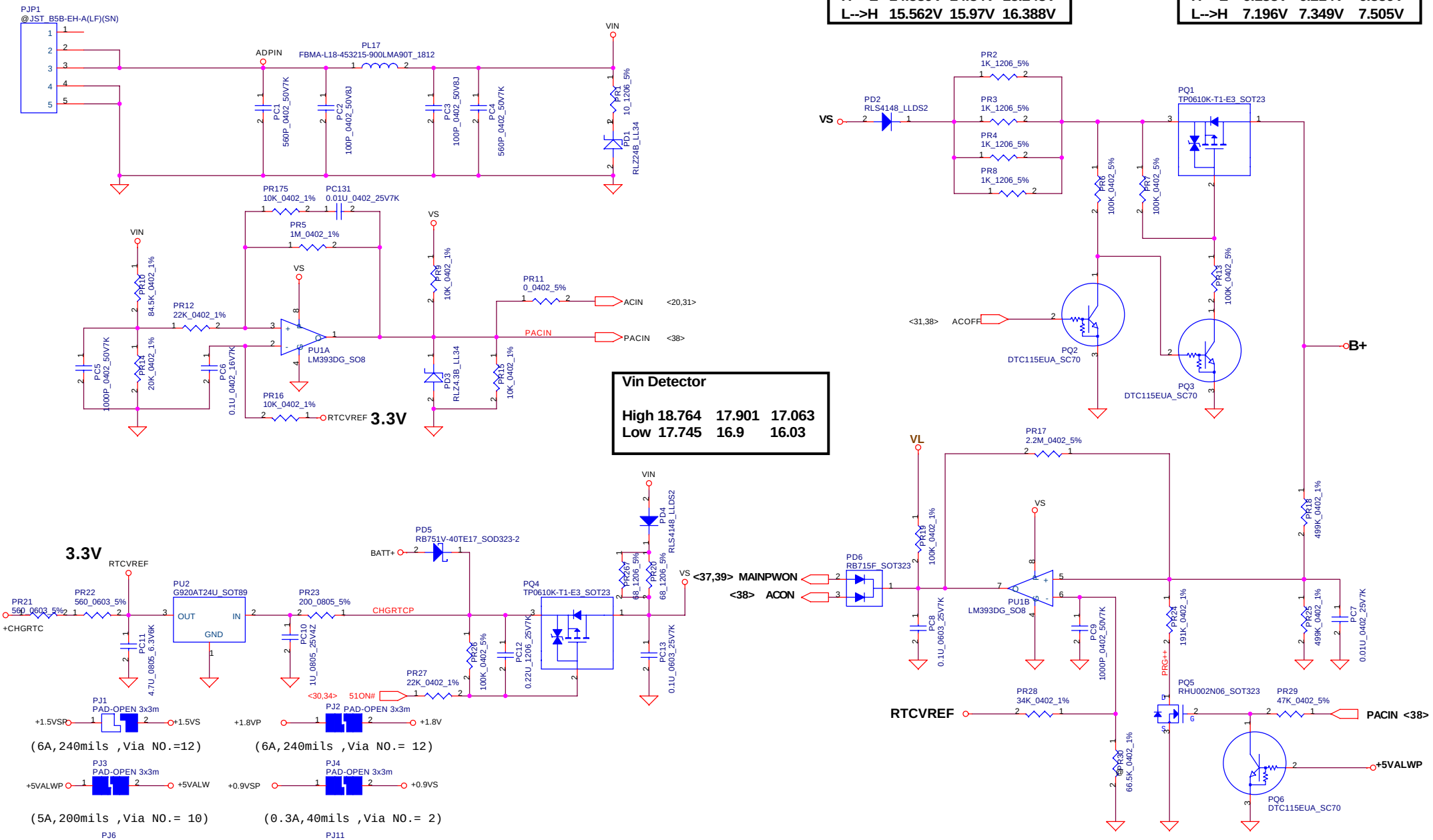


**Vin Detector**

| | | | |
|---|---|---|---|
| High | 18.764 | 17.901 | 17.063 |
| Low | 17.745 | 16.9 | 16.03 |

| | | | |
|---|---|---|---|
| Security Classification | Compal Secret Data | | |
| Issued Date | 2005/10/17 | Deciphered Date | 2006/10/17 |

THIS SHEET OF ENGINEERING DRAWING IS THE PROPRIETARY PROPERTY OF COMPAL ELECTRONICS, INC. AND CONTAINS CONFIDENTIAL AND TRADE SECRET INFORMATION. THIS SHEET MAY NOT BE TRANSFERED FROM THE CUSTODY OF THE COMPETENT DIVISION OF R&D DEPARTMENT EXCEPT AS AUTHORIZED BY COMPAL ELECTRONICS, INC. NEITHER THIS SHEET NOR THE INFORMATION IT CONTAINS MAY BE USED BY OR DISCLOSED TO ANY THIRD PARTY WITHOUT PRIOR WRITTEN CONSENT OF COMPAL ELECTRONICS, INC.

**Compal Electronics, Inc.**

Title: **DCIN/DECTOR**

Size: B | Document Number | Rev: 0.2

Date: Thursday, February 23, 2006 | Sheet 36 of 43

http://laptopblue.vn/

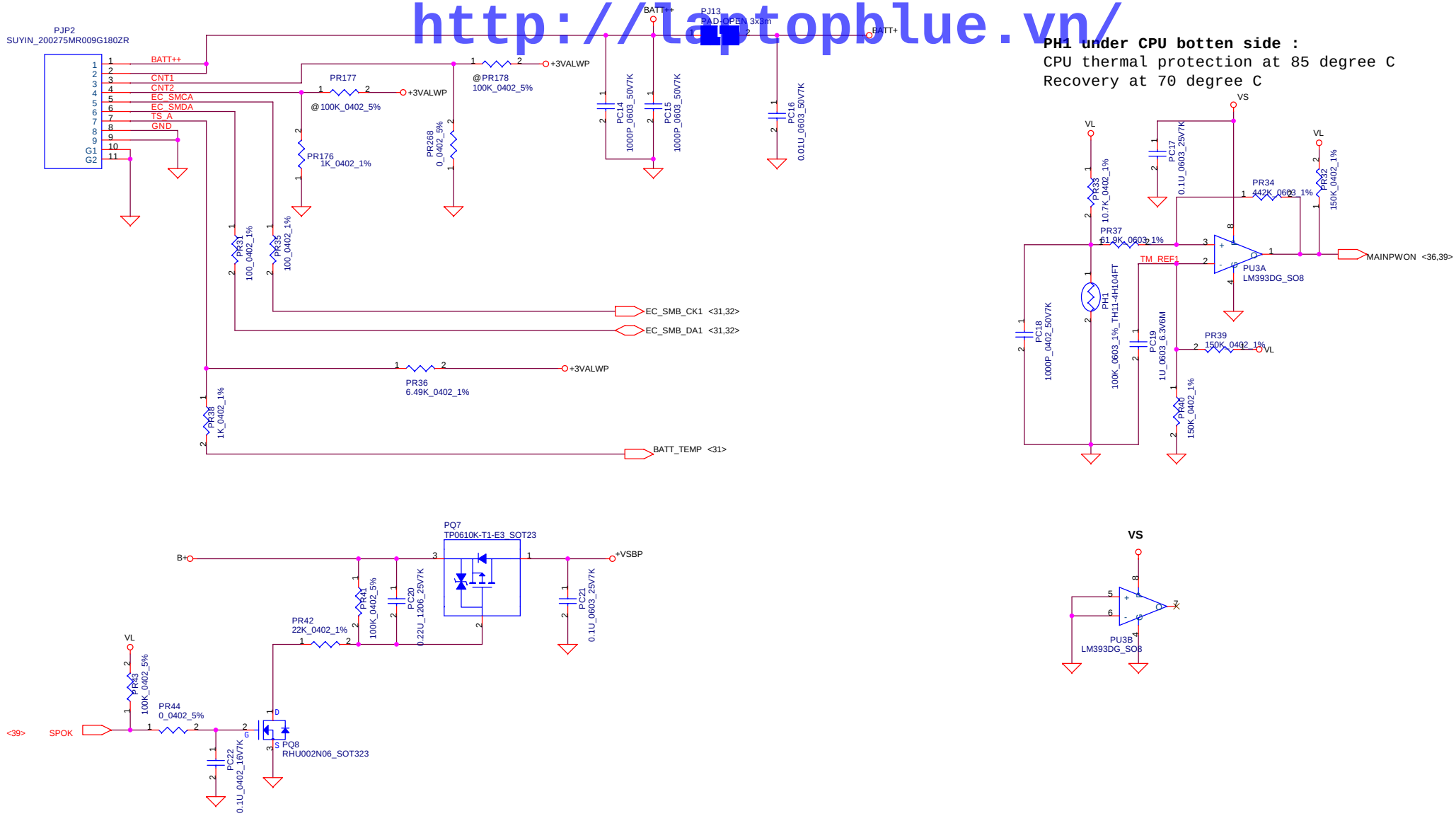


| Security Classification | Compal Secret Data | | |
|---|---|---|---|
| Issued Date | 2005/10/17 | Deciphered Date | 2006/10/17 |

THIS SHEET OF ENGINEERING DRAWING IS THE PROPRIETARY PROPERTY OF COMPAL ELECTRONICS, INC. AND CONTAINS CONFIDENTIAL AND TRADE SECRET INFORMATION. THIS SHEET MAY NOT BE TRANSFERED FROM THE CUSTODY OF THE COMPETENT DIVISION OF R&D DEPARTMENT EXCEPT AS AUTHORIZED BY COMPAL ELECTRONICS, INC. NEITHER THIS SHEET NOR THE INFORMATION IT CONTAINS MAY BE USED BY OR DISCLOSED TO ANY THIRD PARTY WITHOUT PRIOR WRITTEN CONSENT OF COMPAL ELECTRONICS, INC.

**Compal Electronics, Inc.**

Title: **BATTERY CONN. / OTP**

Size: B | Document Number | Rev: 0.1

Date: Thursday, February 23, 2006 | Sheet 37 of 43

75W PR45=0.02_2512_1% PR54=23.7K_0402_1% Iadp=0~3.71A
90W PR45=0.15_2512_1% PR54=28.7K_0402_1% Iadp=0~4.3A

http://laptopblue.vn/

Fosc=14100/Rt=14100/47=300KHz

# Charger

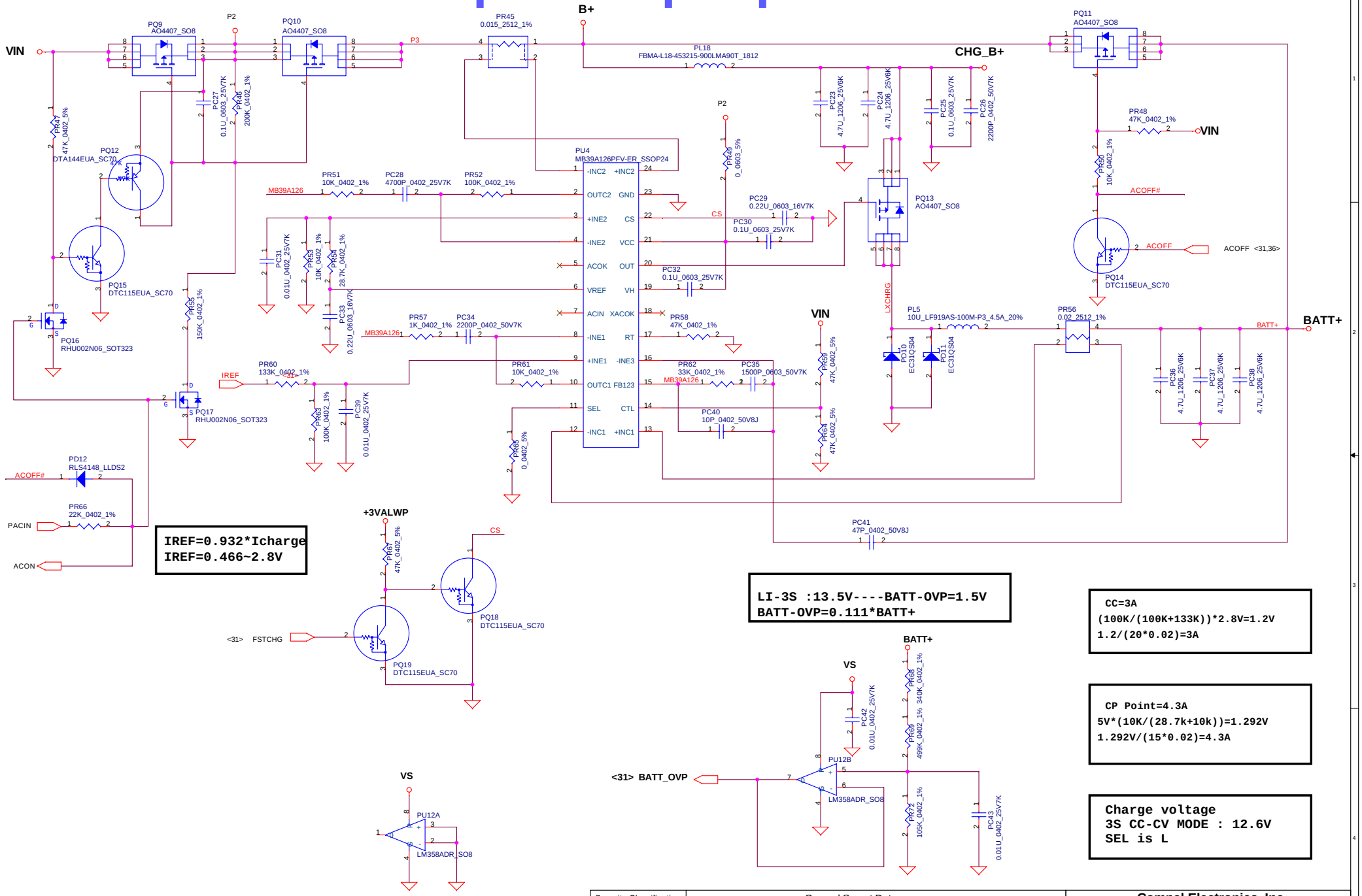


IREF=0.932*Icharge
IREF=0.466~2.8V

LI-3S :13.5V----BATT-OVP=1.5V
BATT-OVP=0.111*BATT+

CC=3A
(100K/(100K+133K))*2.8V=1.2V
1.2/(20*0.02)=3A

CP Point=4.3A
5V*(10K/(28.7k+10k))=1.292V
1.292V/(15*0.02)=4.3A

Charge voltage
3S CC-CV MODE : 12.6V
SEL is L

| | | | |
|---|---|---|---|
| Security Classification | Compal Secret Data | | |
| Issued Date | 2005/10/17 | Deciphered Date | 2006/10/17 |

THIS SHEET OF ENGINEERING DRAWING IS THE PROPRIETARY PROPERTY OF COMPAL ELECTRONICS, INC. AND CONTAINS CONFIDENTIAL AND TRADE SECRET INFORMATION. THIS SHEET MAY NOT BE TRANSFERED FROM THE CUSTODY OF THE COMPETENT DIVISION OF R&D DEPARTMENT EXCEPT AS AUTHORIZED BY COMPAL ELECTRONICS, INC. NEITHER THIS SHEET NOR THE INFORMATION IT CONTAINS MAY BE USED BY OR DISCLOSED TO ANY THIRD PARTY WITHOUT PRIOR WRITTEN CONSENT OF COMPAL ELECTRONICS, INC.

Compal Electronics, Inc.

Title: PWR-Charger

Size: B | Document Number | Rev: 0.1

Date: Thursday, February 23, 2006 | Sheet 38 of 43

http://laptopblue.vn/

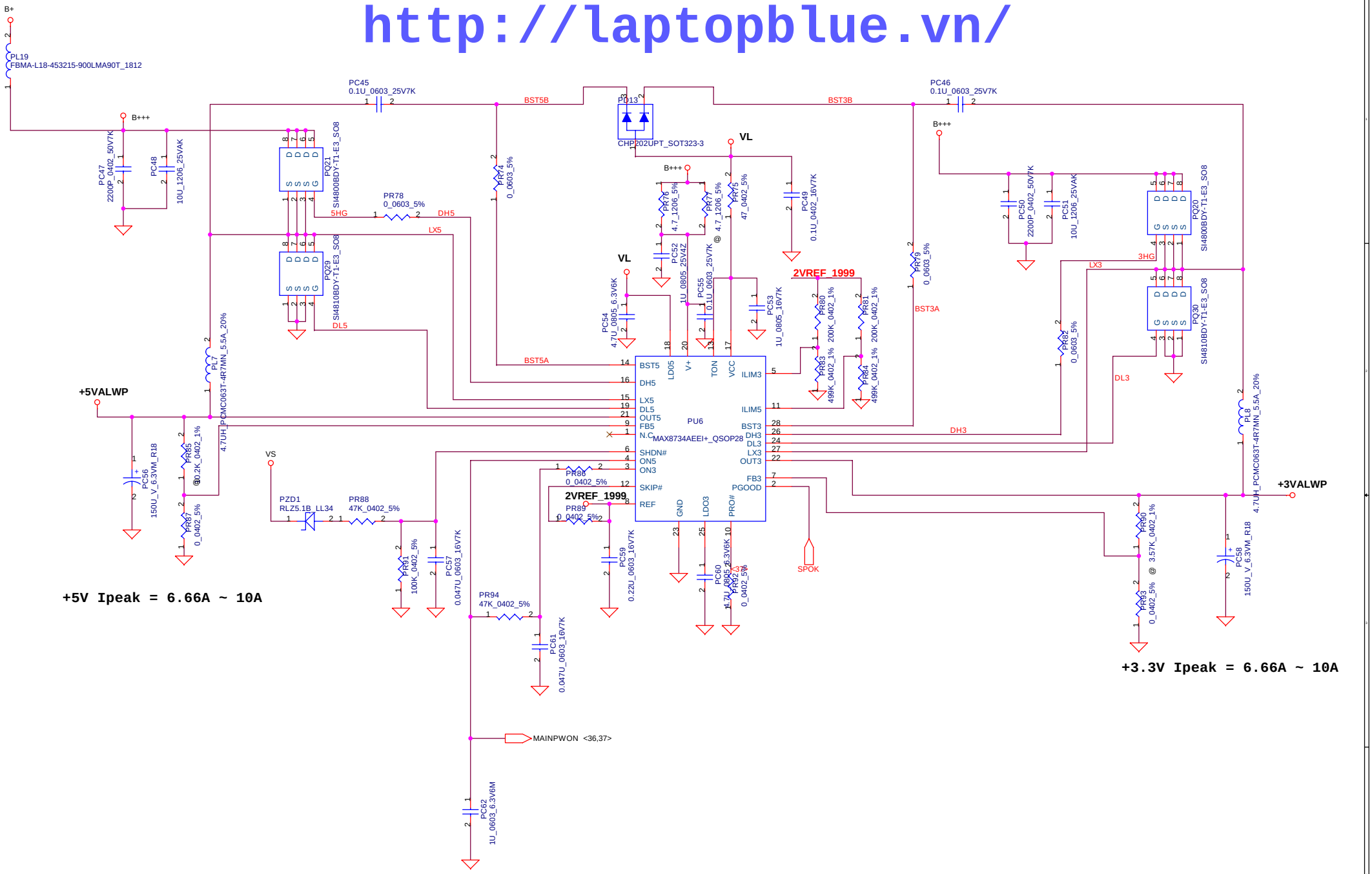


| Security Classification | Compal Secret Data | | |
|---|---|---|---|
| Issued Date | 2005/10/17 | Deciphered Date | 2006/10/17 |

THIS SHEET OF ENGINEERING DRAWING IS THE PROPRIETARY PROPERTY OF COMPAL ELECTRONICS, INC. AND CONTAINS CONFIDENTIAL AND TRADE SECRET INFORMATION. THIS SHEET MAY NOT BE TRANSFERED FROM THE CUSTODY OF THE COMPETENT DIVISION OF R&D DEPARTMENT EXCEPT AS AUTHORIZED BY COMPAL ELECTRONICS, INC. NEITHER THIS SHEET NOR THE INFORMATION IT CONTAINS MAY BE USED BY OR DISCLOSED TO ANY THIRD PARTY WITHOUT PRIOR WRITTEN CONSENT OF COMPAL ELECTRONICS, INC.

**Compal Electronics, Inc.**

Title: **+5VALWP/+3VALWP**

Size: Custom | Document Number | Rev: 0.1

Date: Thursday, February 23, 2006 | Sheet 39 of 43

http://laptopblue.vn/

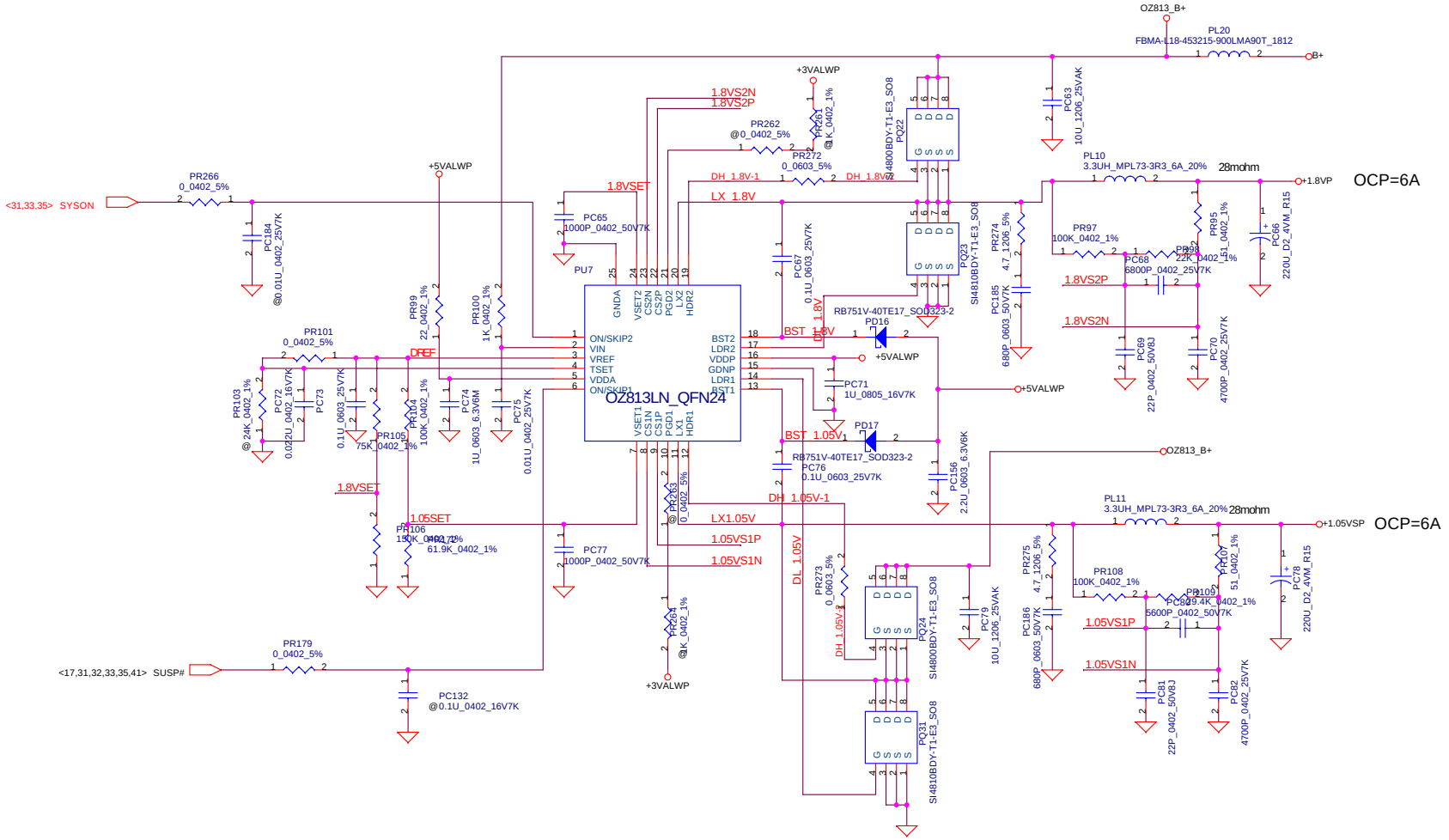


| Security Classification | Compal Secret Data | | |
|---|---|---|---|
| Issued Date | 2005/10/17 | Deciphered Date | 2006/10/17 |

THIS SHEET OF ENGINEERING DRAWING IS THE PROPRIETARY PROPERTY OF COMPAL ELECTRONICS, INC. AND CONTAINS CONFIDENTIAL AND TRADE SECRET INFORMATION. THIS SHEET MAY NOT BE TRANSFERED FROM THE CUSTODY OF THE COMPETENT DIVISION OF R&D DEPARTMENT EXCEPT AS AUTHORIZED BY COMPAL ELECTRONICS, INC. NEITHER THIS SHEET NOR THE INFORMATION IT CONTAINS MAY BE USED BY OR DISCLOSED TO ANY THIRD PARTY WITHOUT PRIOR WRITTEN CONSENT OF COMPAL ELECTRONICS, INC.

**Compal Electronics, Inc.**

Title: **1.05VP/1.8VP**

Size: Custom | Document Number | Rev: 0.1

Date: Thursday, February 23, 2006 | Sheet 40 of 43

http://laptopblue.vn/

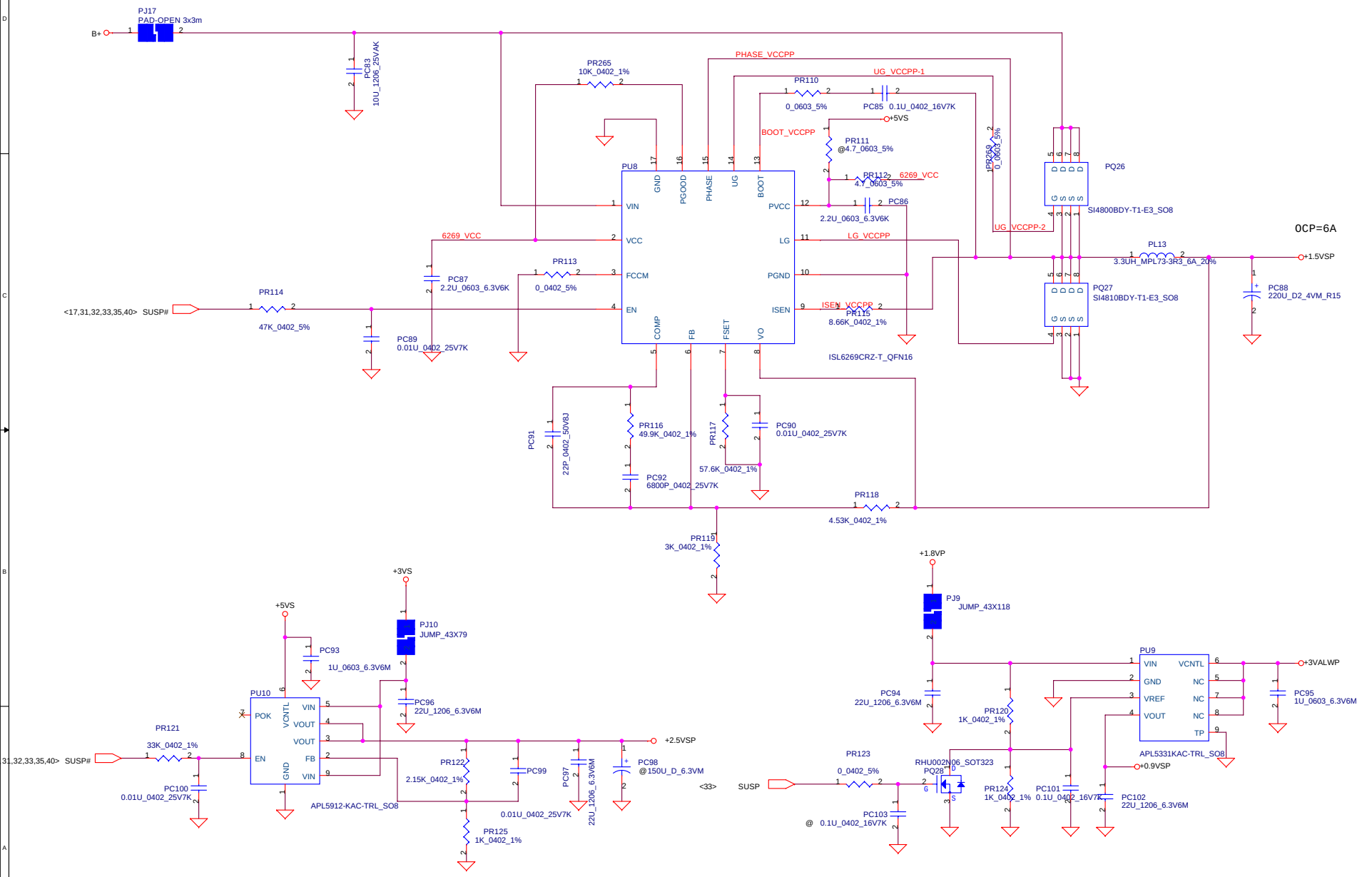


| Security Classification | Compal Secret Data | | |
|---|---|---|---|
| Issued Date | 2005/10/17 | Deciphered Date | 2006/10/17 |

THIS SHEET OF ENGINEERING DRAWING IS THE PROPRIETARY PROPERTY OF COMPAL ELECTRONICS, INC. AND CONTAINS CONFIDENTIAL AND TRADE SECRET INFORMATION. THIS SHEET MAY NOT BE TRANSFERED FROM THE CUSTODY OF THE COMPETENT DIVISION OF R&D DEPARTMENT EXCEPT AS AUTHORIZED BY COMPAL ELECTRONICS, INC. NEITHER THIS SHEET NOR THE INFORMATION IT CONTAINS MAY BE USED BY OR DISCLOSED TO ANY THIRD PARTY WITHOUT PRIOR WRITTEN CONSENT OF COMPAL ELECTRONICS, INC.

**Compal Electronics, Inc.**

Title: **+VCCPP/+2.5VSP/0.9VSP**

Size: Custom | Document Number | Rev: 0.1

Date: Thursday, February 23, 2006 | Sheet 41 of 43

http://laptopblue.vn/

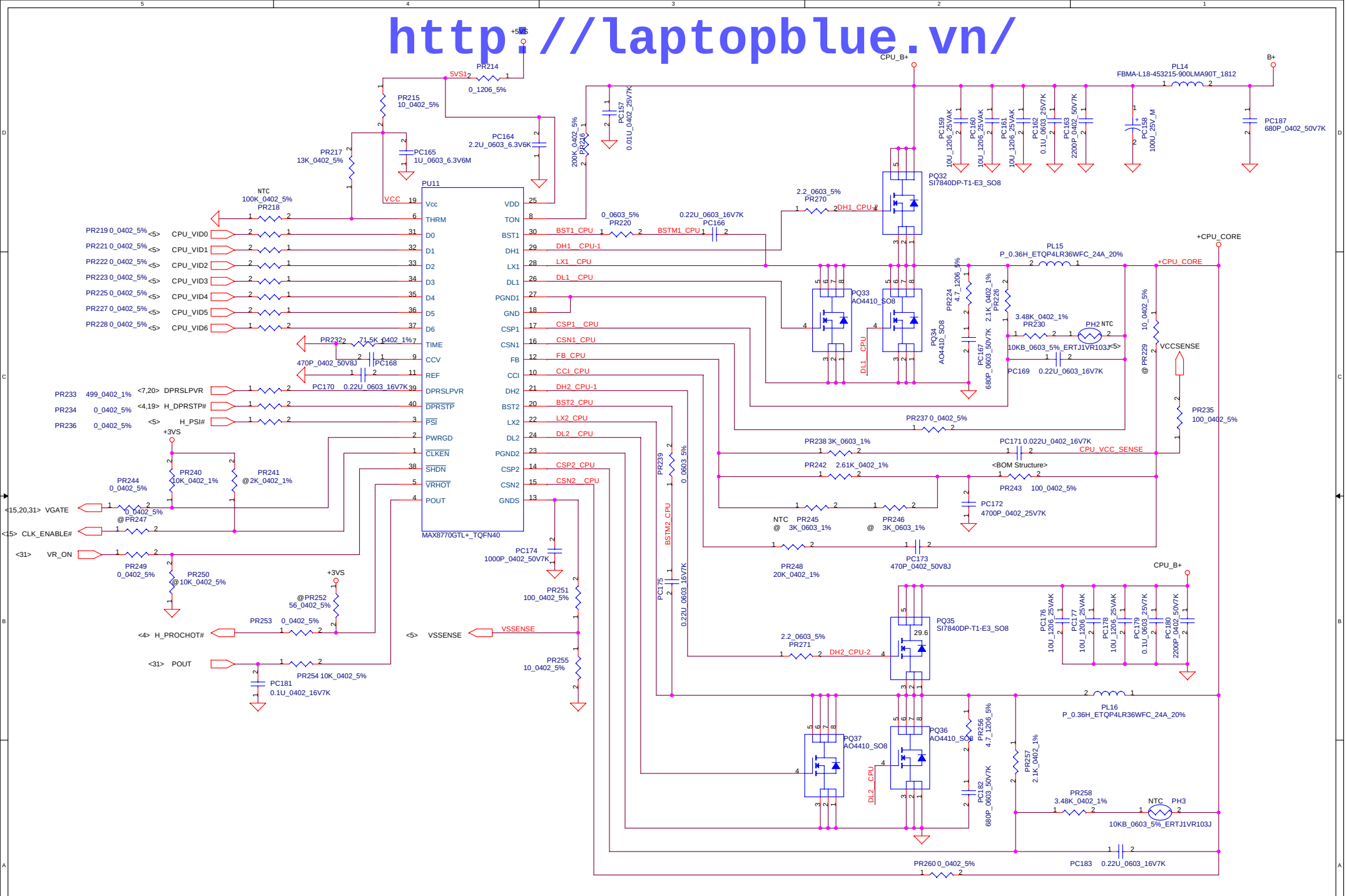


| Security Classification | Compal Secret Data | | |
|---|---|---|---|
| Issued Date | 2005/10/17 | Deciphered Date | 2006/10/17 |

THIS SHEET OF ENGINEERING DRAWING IS THE PROPRIETARY PROPERTY OF COMPAL ELECTRONICS, INC. AND CONTAINS CONFIDENTIAL AND TRADE SECRET INFORMATION. THIS SHEET MAY NOT BE TRANSFERED FROM THE CUSTODY OF THE COMPETENT DIVISION OF R&D DEPARTMENT EXCEPT AS AUTHORIZED BY COMPAL ELECTRONICS, INC. NEITHER THIS SHEET NOR THE INFORMATION IT CONTAINS MAY BE USED BY OR DISCLOSED TO ANY THIRD PARTY WITHOUT PRIOR WRITTEN CONSENT OF COMPAL ELECTRONICS, INC.

**Compal Electronics, Inc.**

Title: **+CPU_CORE**

Size: Custom | Document Number | Rev: 0.1

Date: Thursday, February 23, 2006 | Sheet 42 of 43

http://laptopblue.vn/

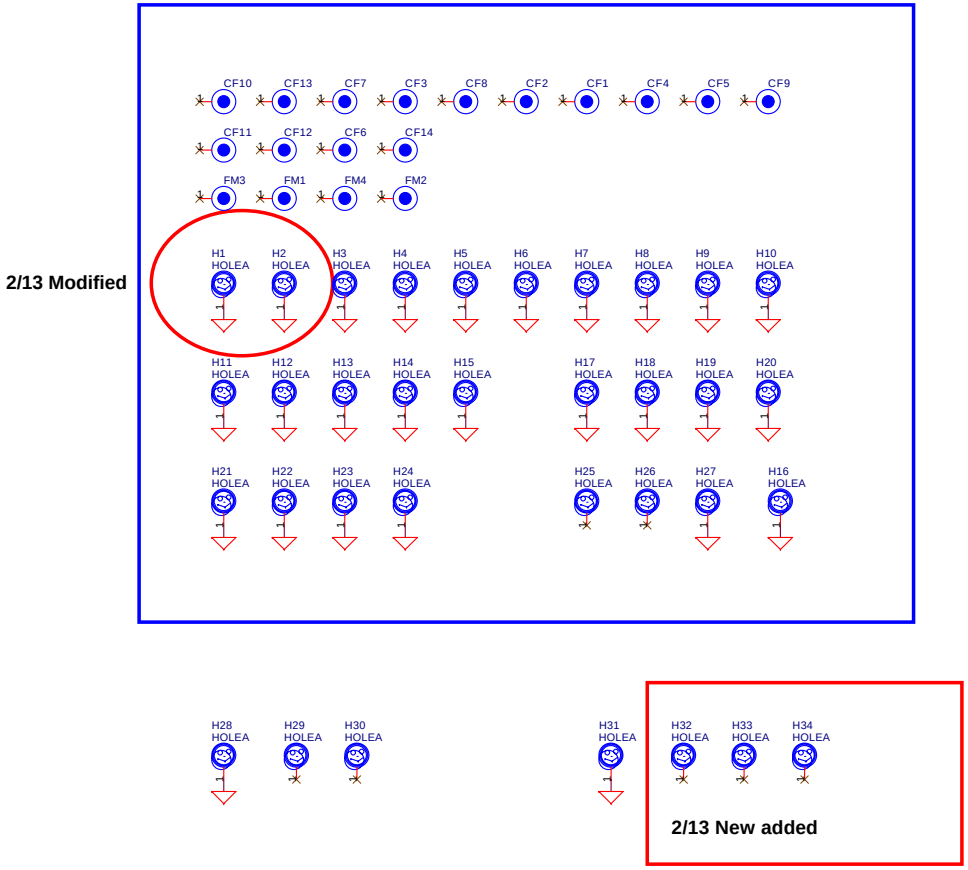


| | | | |
|---|---|---|---|
| Security Classification | Compal Secret Data | | |
| Issued Date | 2005/10/17 | Deciphered Date | 2006/10/17 |

THIS SHEET OF ENGINEERING DRAWING IS THE PROPRIETARY PROPERTY OF COMPAL ELECTRONICS, INC. AND CONTAINS CONFIDENTIAL AND TRADE SECRET INFORMATION. THIS SHEET MAY NOT BE TRANSFERRED FROM THE CUSTODY OF THE COMPETENT DIVISION OF R&D DEPARTMENT EXCEPT AS AUTHORIZED BY COMPAL ELECTRONICS, INC. NEITHER THIS SHEET NOR THE INFORMATION IT CONTAINS MAY BE USED BY OR DISCLOSED TO ANY THIRD PARTY WITHOUT PRIOR WRITTEN CONSENT OF COMPAL ELECTRONICS, INC.

**Compal Electronics, Inc.**

Title: **Holes**

| Size | Document Number | Rev |
|---|---|---|
| Custom | | 0.1 |

Date: Thursday, February 23, 2006 | Sheet 43 of 43