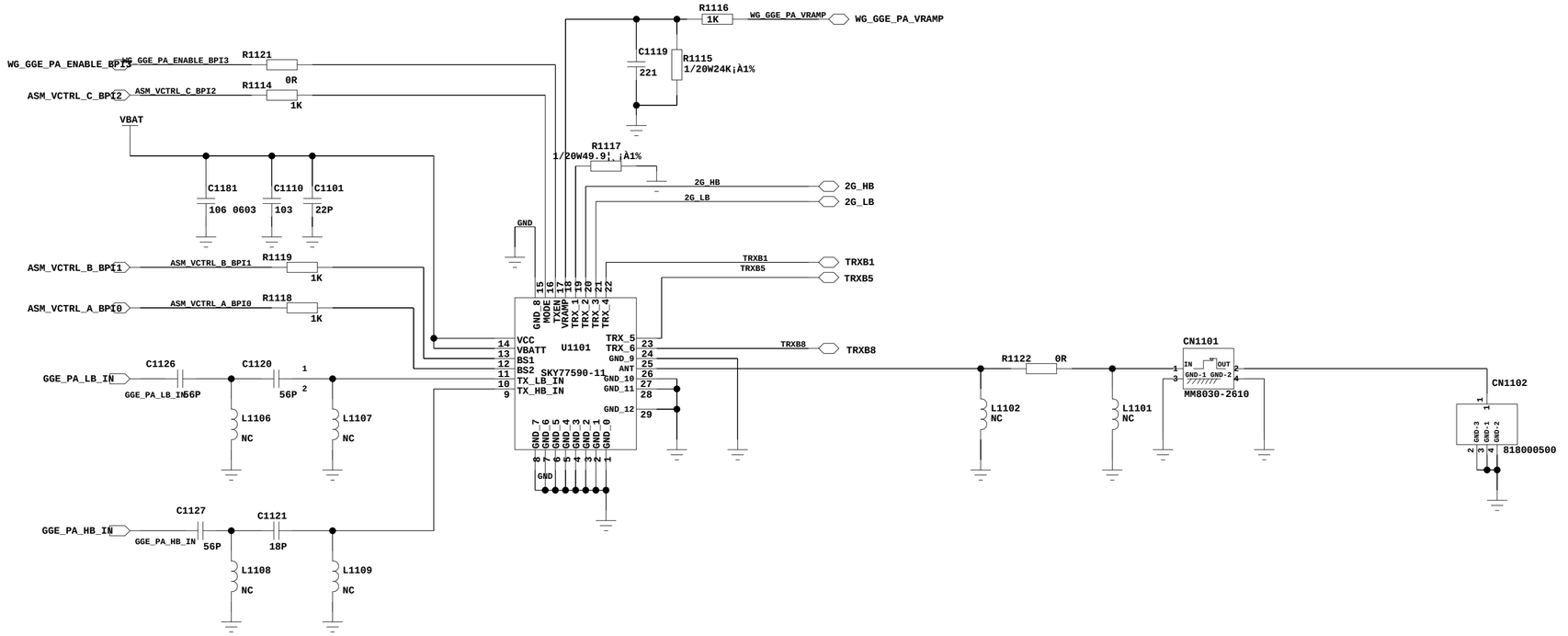

B158

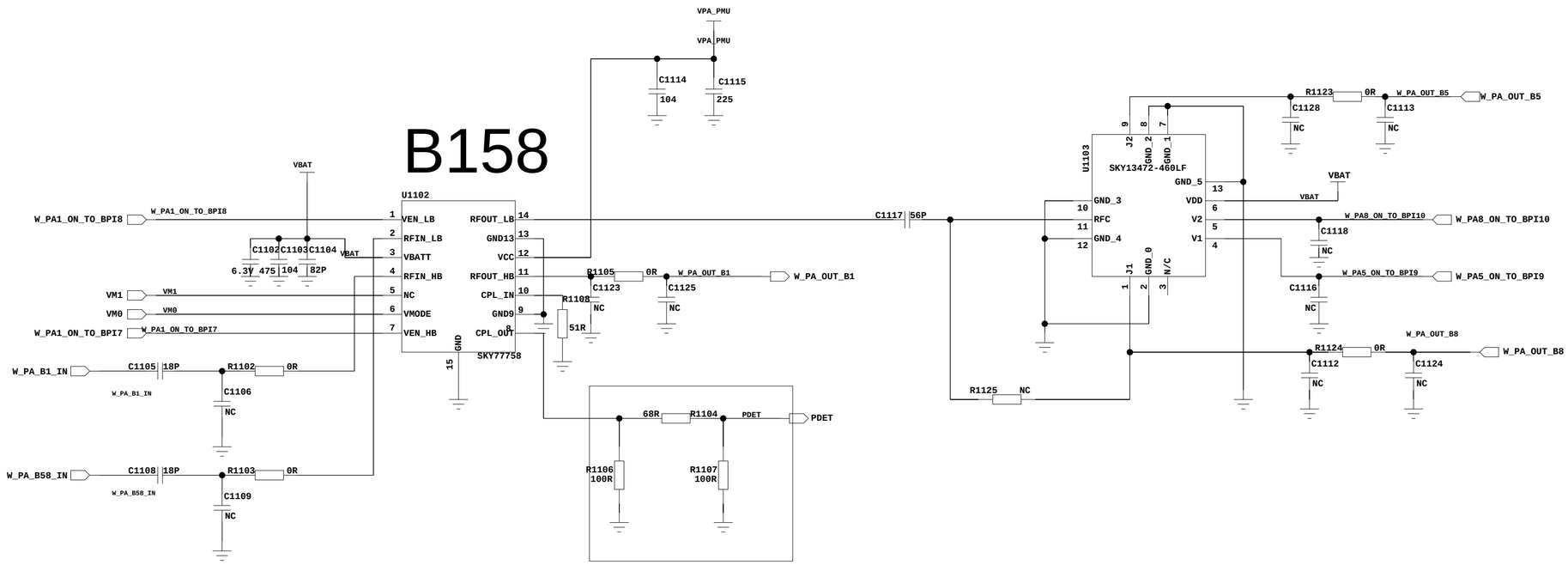

	Sign	Date	Type:
Drawn By			Draw No: 213009
Checked By			Sheet 9 of 12 TG-TX2ASM Ver:
Standard By			
Approved By			

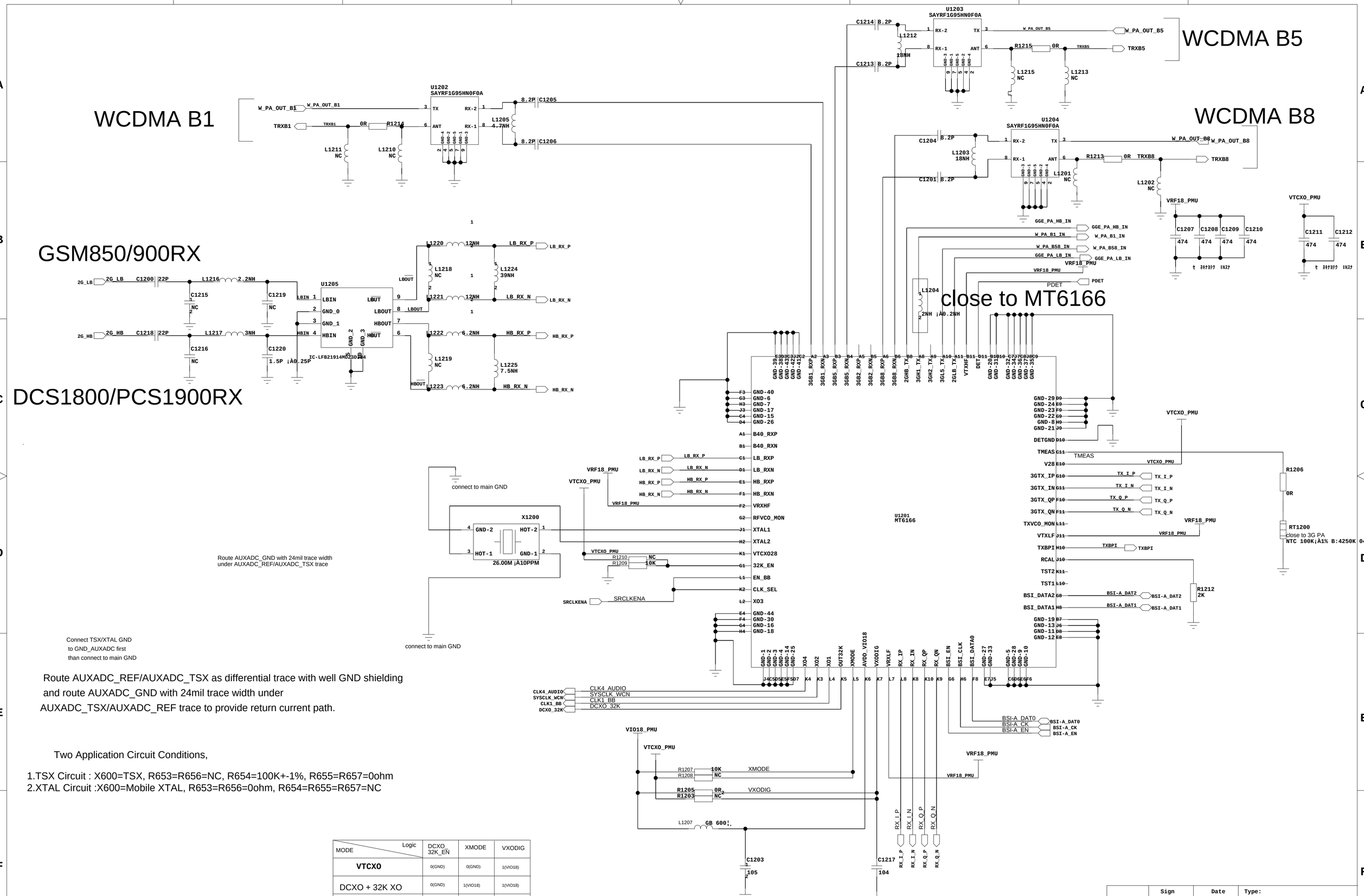

Route AUXADC_REF/AUXADC_TSX as differential trace with well GND shielding and route AUXADC_GND with 24mil trace width under AUXADC_TSX/AUXADC_REF trace to provide return current path.

Two Application Circuit Conditions,

1.TSX Circuit : X600=TSX, R653=R656=NC, R654=100K+-1%, R655=R657=0ohm
2.XTAL Circuit :X600=Mobile XTAL, R653=R656=0ohm, R654=R655=R657=NC

MODE \ Logic	DCXO_32K_EN	XMODE	VXODIG
VTCXO	0(GND)	0(GND)	1(VIO18)
DCXO + 32K XO	0(GND)	1(VIO18)	1(VIO18)
DCXO + 32K-Less	1(VTXCO28)	1(VTXCO28)	1(VTXCO28)

	Sign	Date	Type:
Drawn By			Draw No: 13033
Checked By			Sheet 12 of 11_MT6166 Ver:
Standard By			
Approved By			

WIFI/Bluetooth

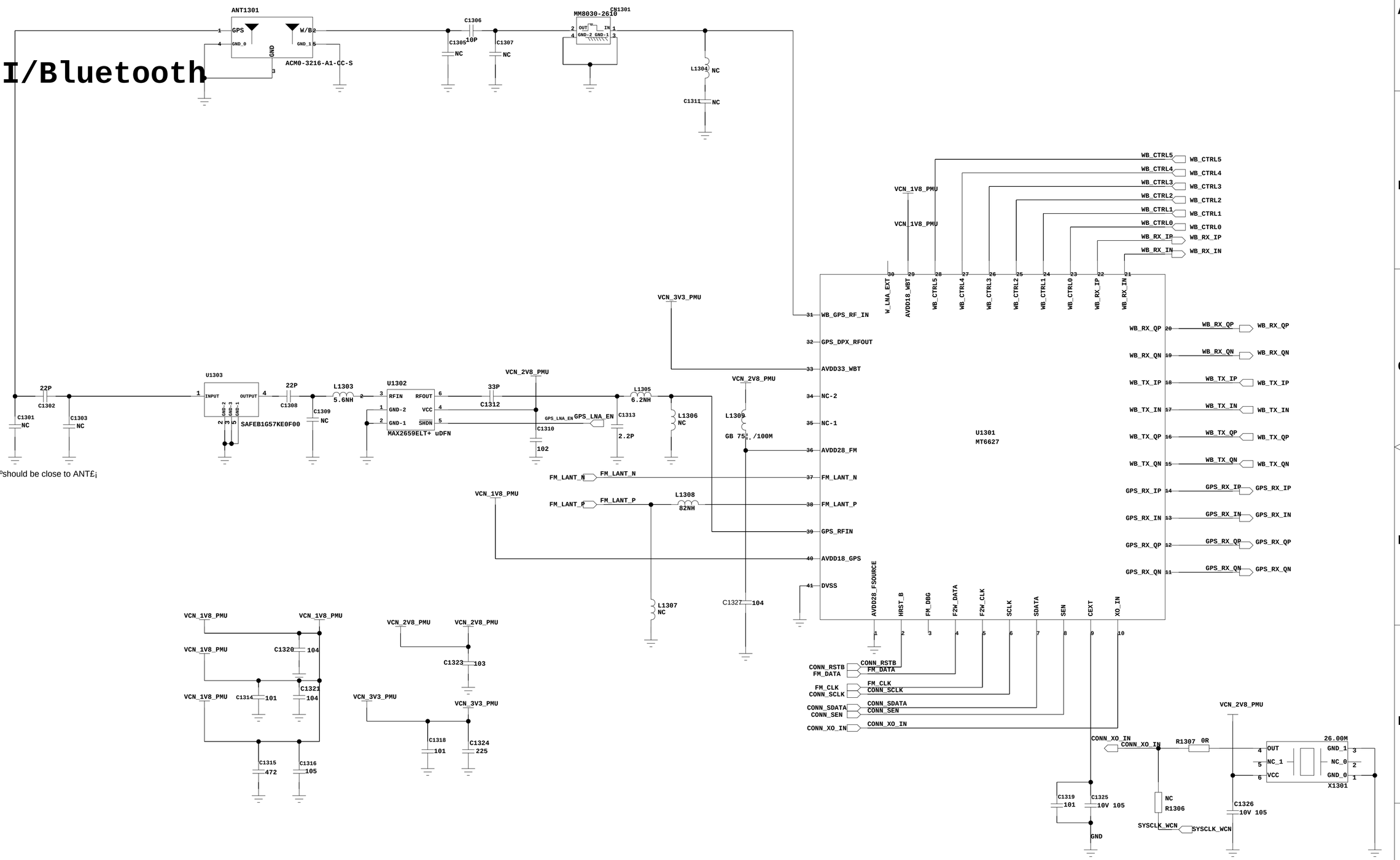

GPS

MATCHINGÊºshould be close to ANTÊ¡

	Sign	Date	Type:	
Drawn By			Draw No: 13033	
Checked By			Sheet 12 of	Ver: 0.0
Standard By			oppo	
Approved By				

PM6323

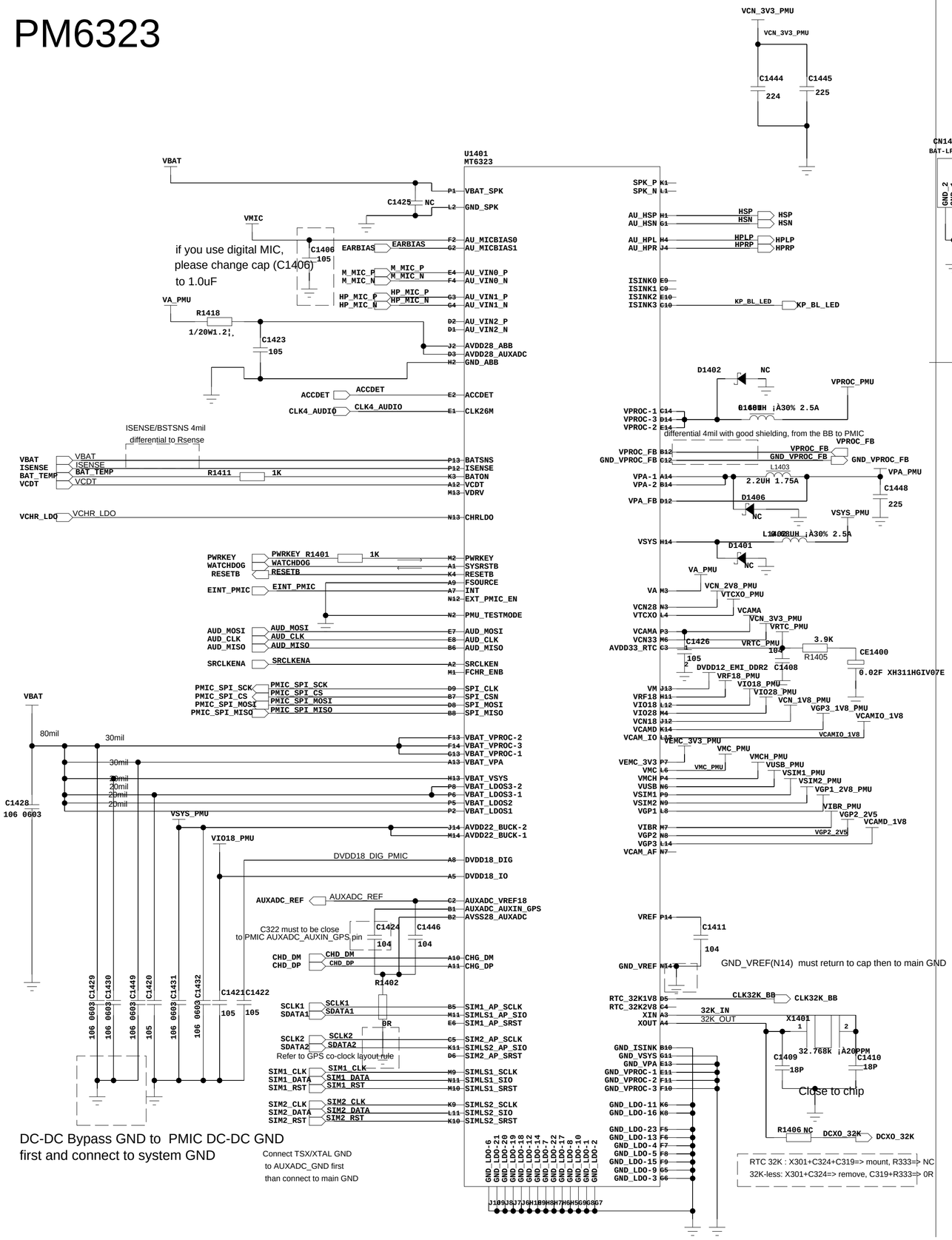

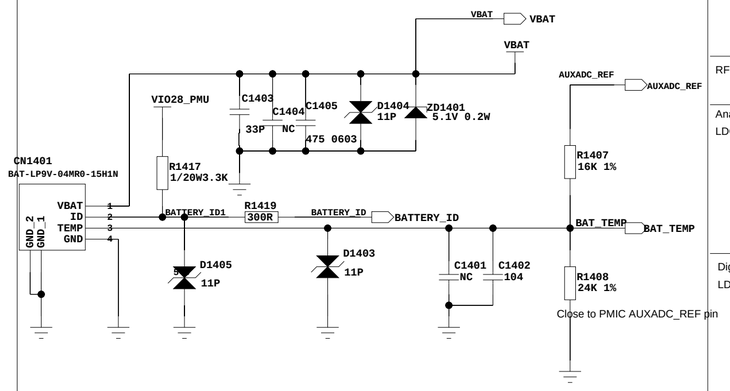

	Symbol	Vout (V)	Iout (mA)	
Buck				
	VPROC	0.75 1.3 with 0.025 step	1500	SRCLKENA, DVS[2:1]
	VRF18	1.8	250	SRCLKENA
	VCORE	0.75 1.3 with 0.025 step	1000	SRCLKENA
	VIO1V8	1.825	1000	N/A
RF LDO	VRF	2.85	200	SRCLKENA
	VTCXO	2.8	40	SRCLKENA
Analog LDO	VCAMA	1.5/1.8/2.5/2.8	200	
	VA1	1.8/2.0/2.1/2.5	100	SRCLKENA
	VA2	2.5/2.8	100	N/A
	VM12_1	1.1 1.3	300	SRCLKENA
	VM12_2	1.1 1.3	300	SRCLKENA
	VM12_INT	1.1 1.3	300	SRCLKENA
	VIO28	2.65 2.95	100	
Digital LDO	VSIM	1.8/3.0	100	
	VSIM2	1.3/1.5/1.8/2.5/2.8/3.0/3.3	100	
	VUSB	3.1 3.5	100	
	VCAMD	1.3/1.5/1.8/2.5/2.8/3.0/3.3	300	
	VCAM_IO	1.3/1.5/1.8/2.5/2.8/3.0/3.3	100	
	VCAM_AF	1.3/1.5/1.8/2.5/2.8/3.0/3.3	200	
	VMC	1.3/1.5/1.8/2.5/2.8/3.0/3.3	200	
	VMCH	1.3/1.5/1.8/2.5/2.8/3.0/3.3	400	
	VGP	1.3/1.5/1.8/2.5/2.8/3.0/3.3	200	
			200	
	VGP2	1.3/1.5/1.8/2.5/2.8/3.0/3.3	200	
Vibrator	VIBR	1.3/1.5/1.8/2.5/2.8/3.0/3.3		
RTC	VRTC	1.8/2.8/2.1/2.8		
	VREF			

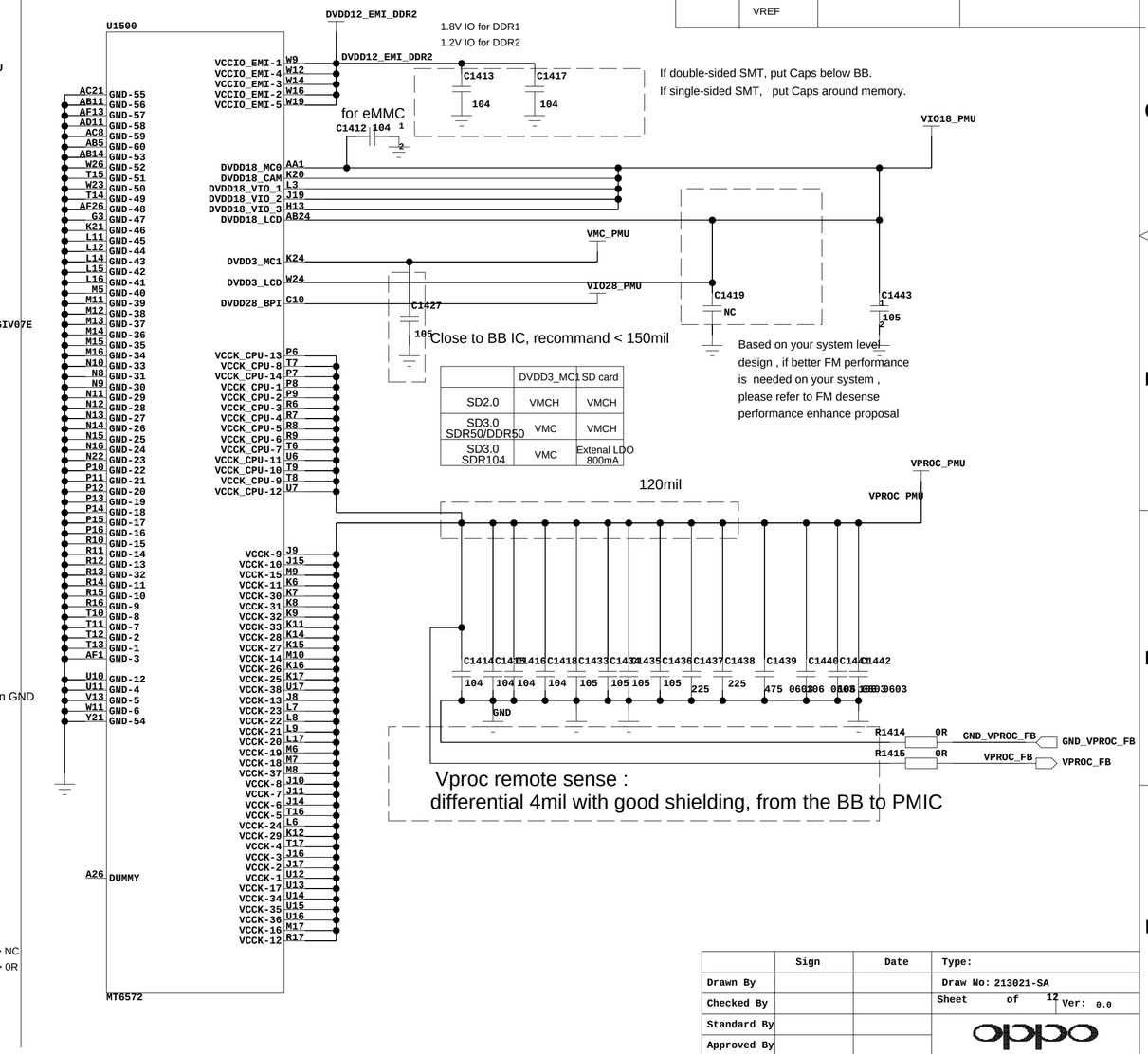

	DVDD3_MC1	SD card
SD2.0	VMCH	VMCH
SD3.0 SDR50/DDR50	VMC	VMCH
SD3.0 SDR104	VMC	Extenal LDO 800mA

	Sign	Date	Type:
Drawn By			Draw No: 213021-SA
Checked By			Sheet of 12 Ver: 0.0
Standard By			
Approved By			

MT6572 TO MT6627

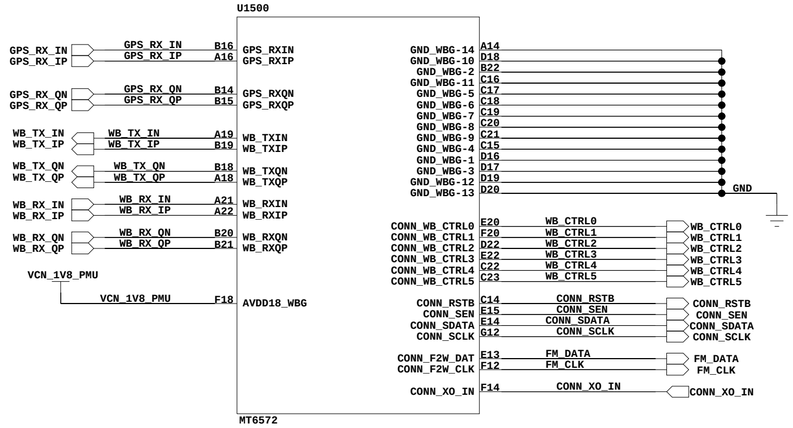

MT6572 TO MT6166/PA

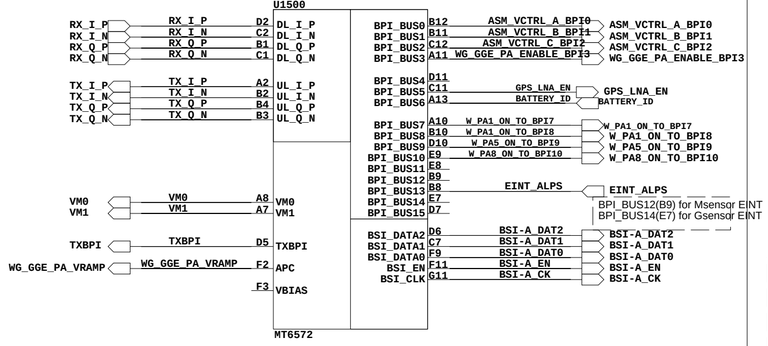

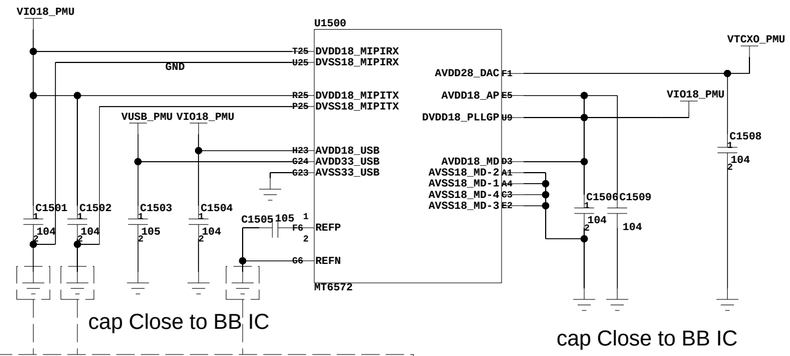

dedicate VSS ball, must return to cap then to main GND:
1. REFN(G6) => C109
2. DVSS18_MIPIRX(U25) => C107
3. DVSS18_MIPITX(P25) => C101

KCOL0£ºno-timeout Download Select,(Input), pull-low when powerup to enter download

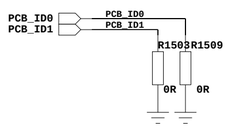

MT6572 support JTAG from below :
1. KP (recommand)
2. MC1
3. CAM
for JTAG pin out from MC1/CAM, refer to HW design notice

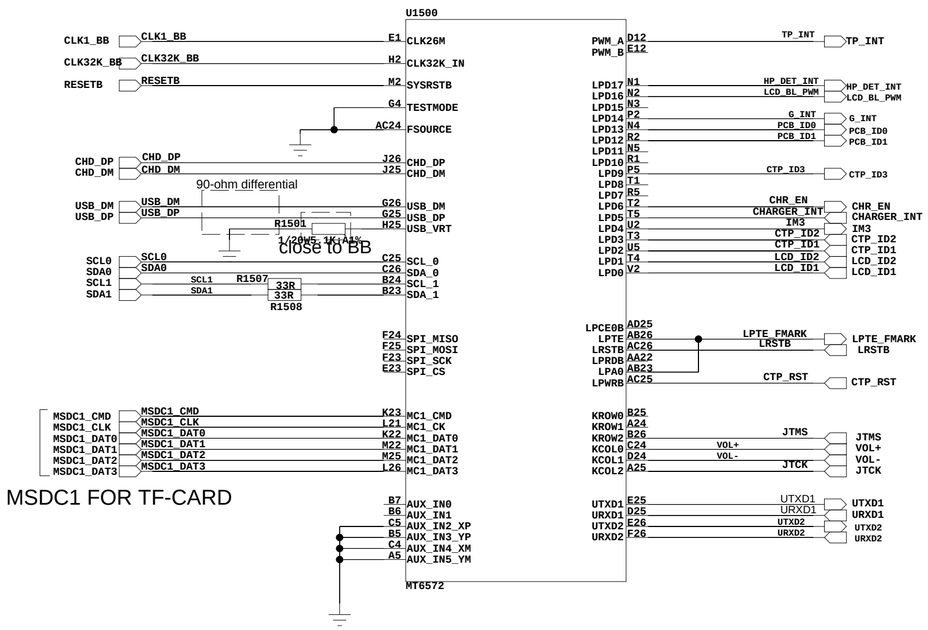

LCD+CAMERA

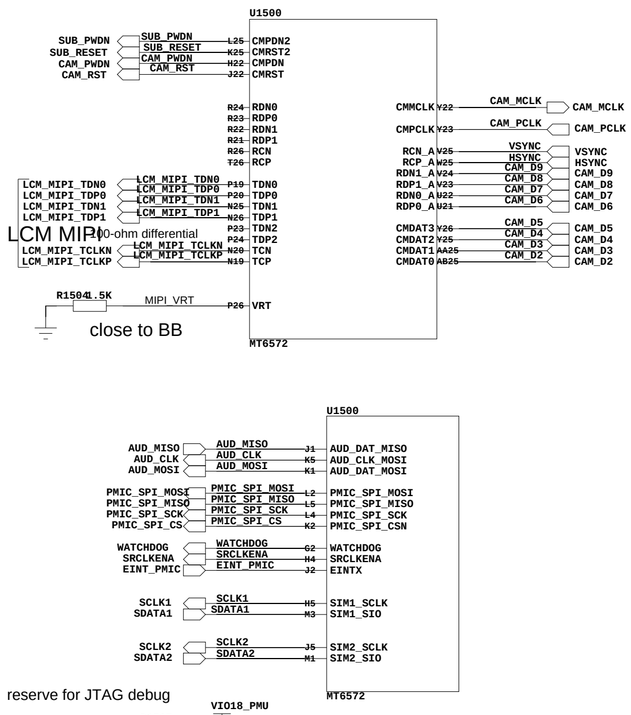

NAND&DDR

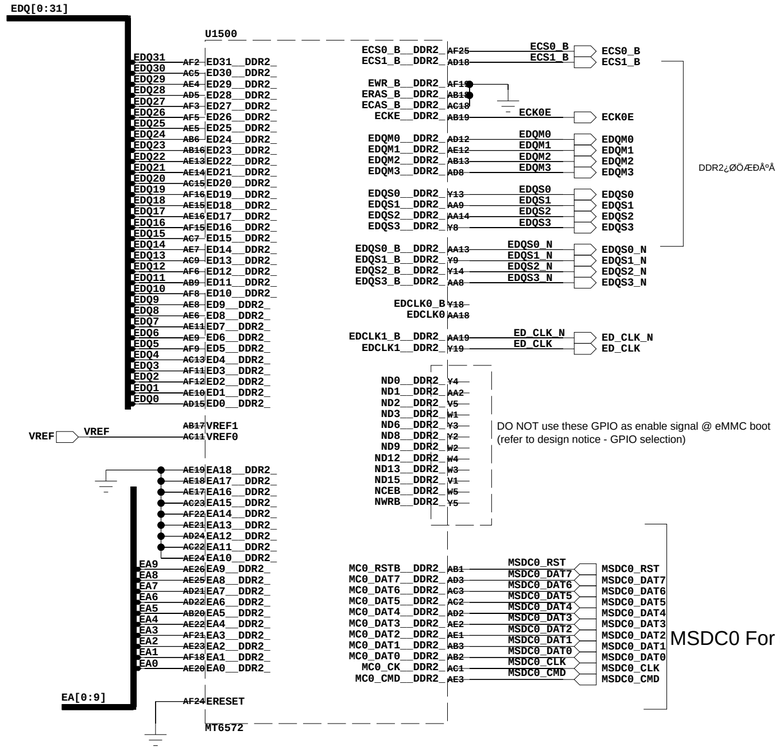

MSDC1 FOR TF-CARD

MSDC0 For eMMC

	Sign	Date	Type:
Drawn By			Draw No: 213021-SA
Checked By			Sheet of 12 Ver: 0.0
Standard By			
Approved By			

LCD Interface

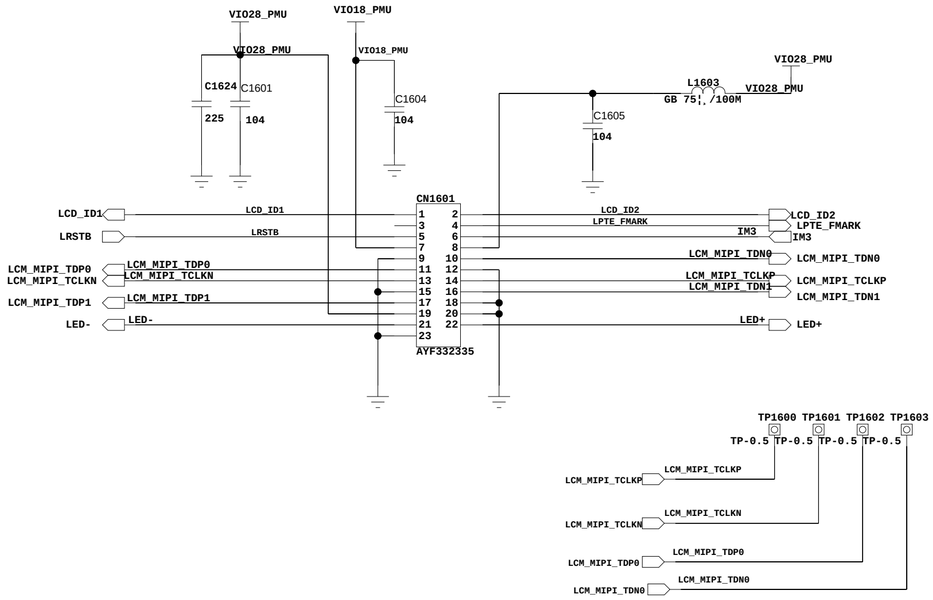

LCD Backlight

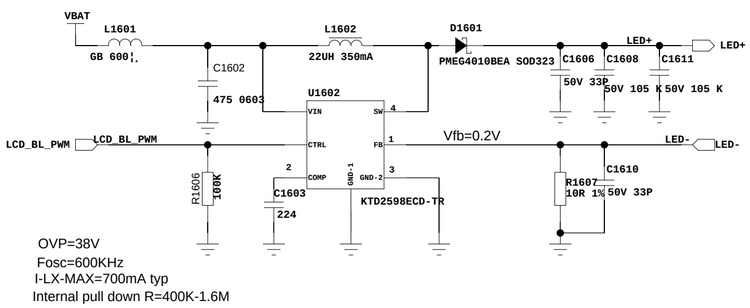

MAIN CAM

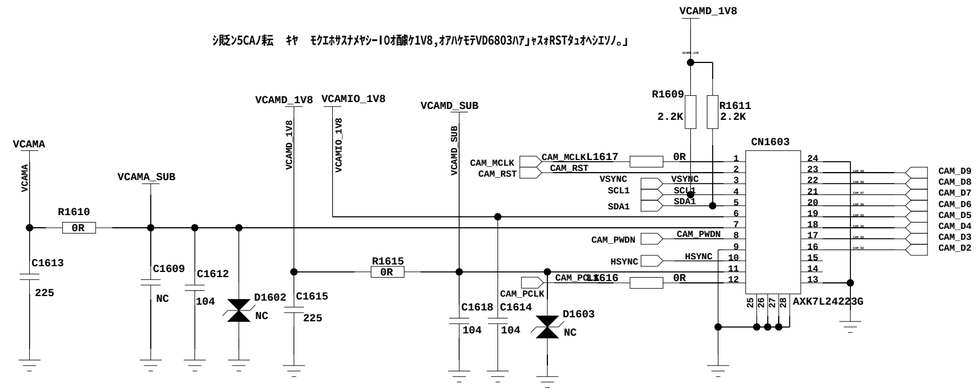

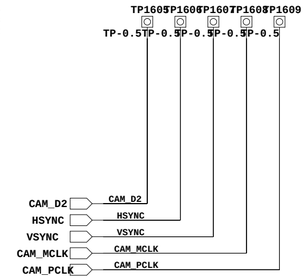

SUB CAM

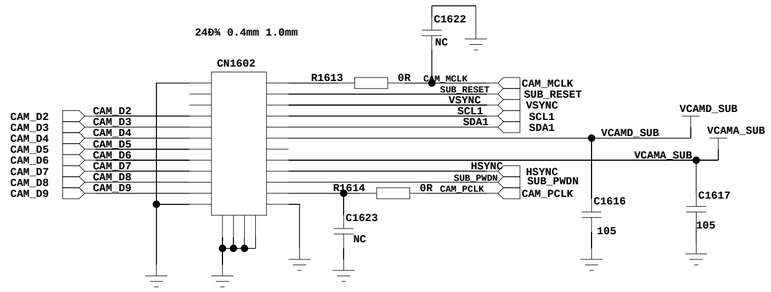

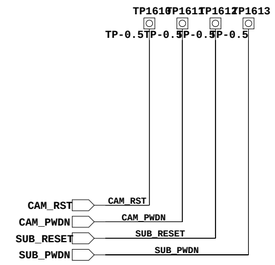

	Sign	Date	Type:
Drawn By			Draw No: 213021-SA
Checked By			Sheet of 12 Ver: 0.0
Standard By			oppo
Approved By			

DDR2

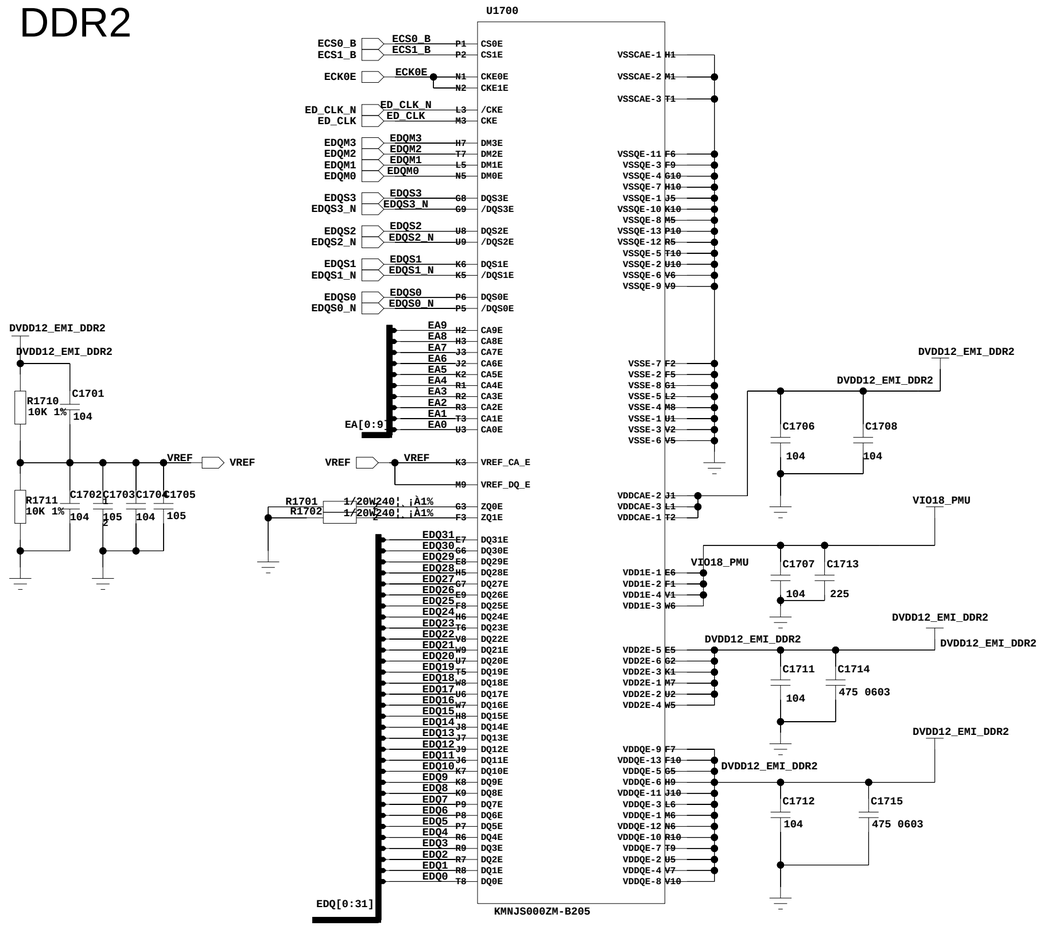

EMMC

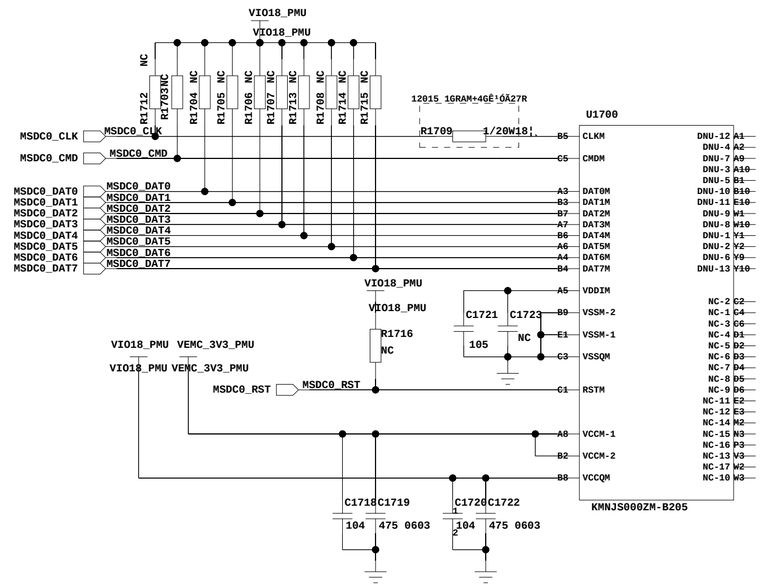

	Sign	Date	Type:
Drawn By			Draw No: 213021-SA
Checked By			Sheet of 12 Ver: 0.0
Standard By			oppo
Approved By			

SIM1

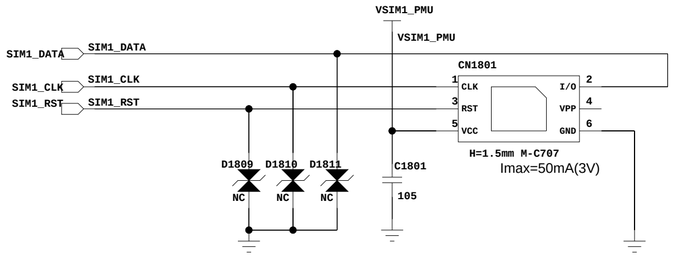

SIM2

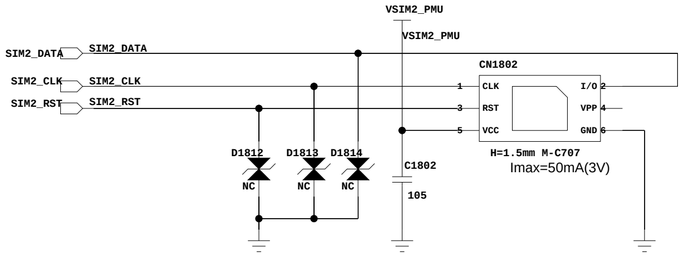

TF Card

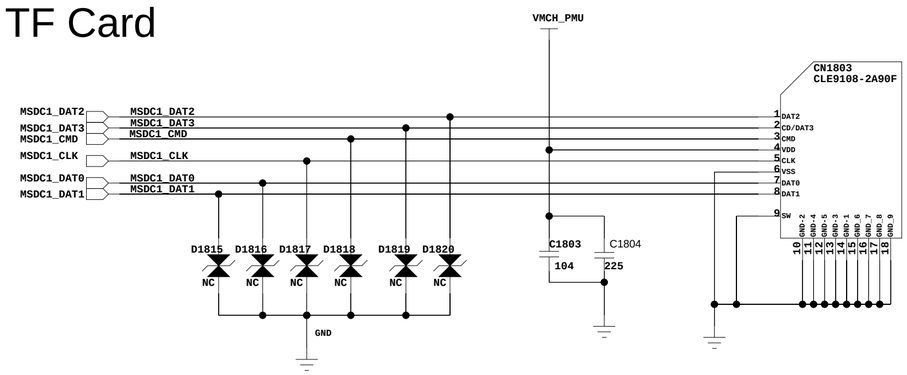

POWER KEY

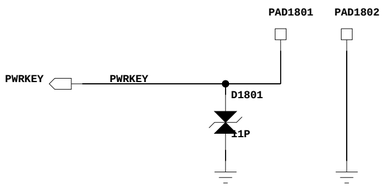

VOL+/- KEY

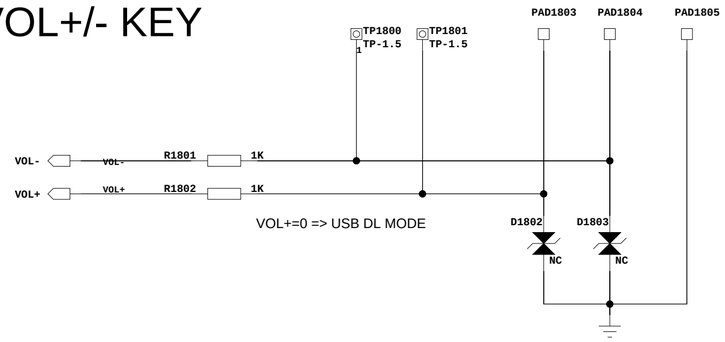

Receiver

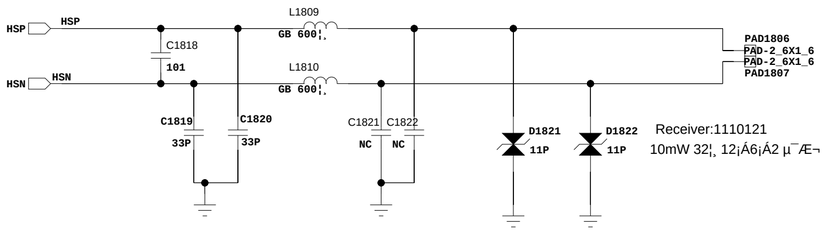

¶ú»ú×ù

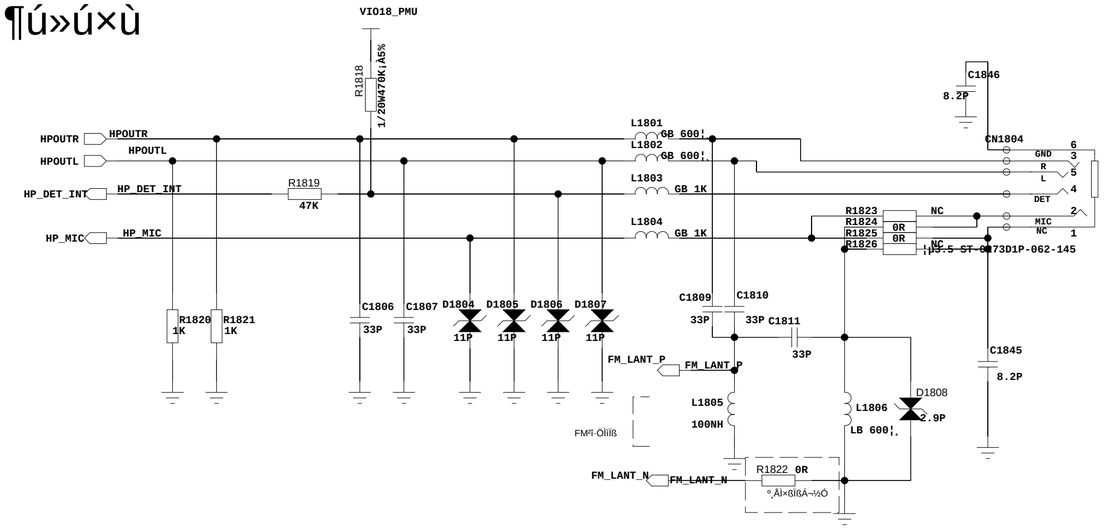

HP MIC

ACCDET have 3 steps for headphone detect and hookint

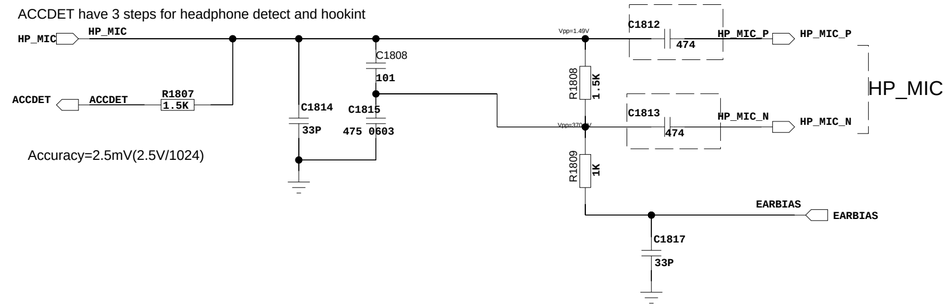

Accuracy=2.5mV(2.5V/1024)

YDA165

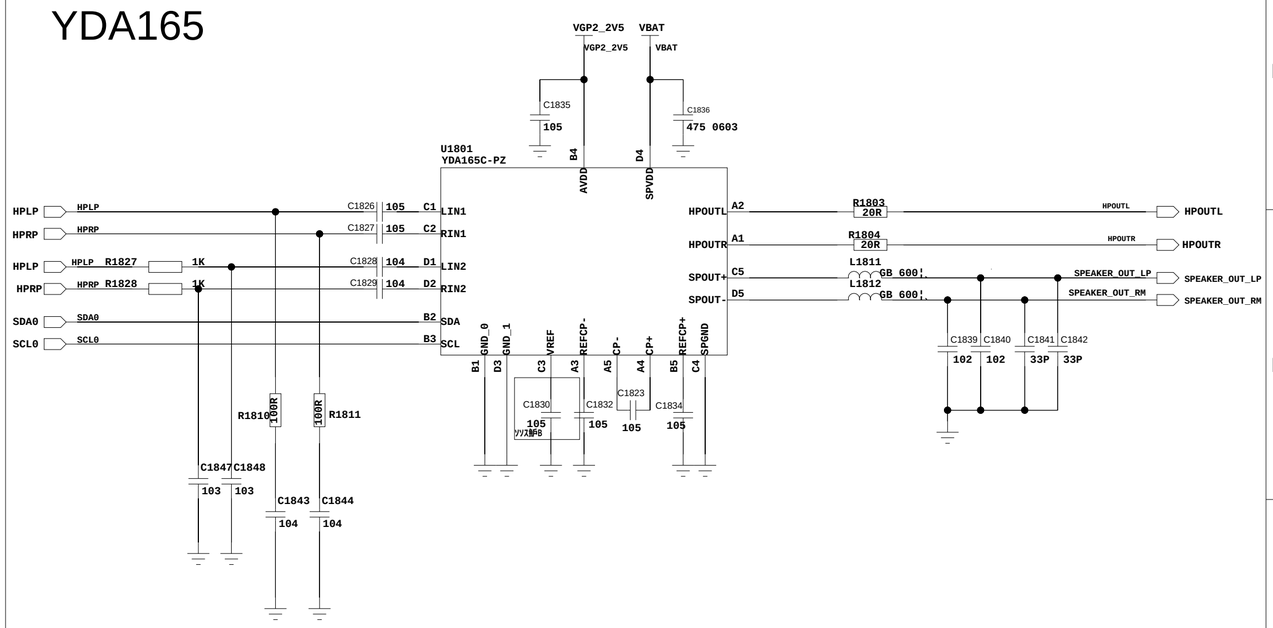

	Sign	Date	Type: 213021-SA
Drawn By			Draw No:
Checked By			Sheet of 12 Ver: 0.0
Standard By			oppo
Approved By			

USB Port

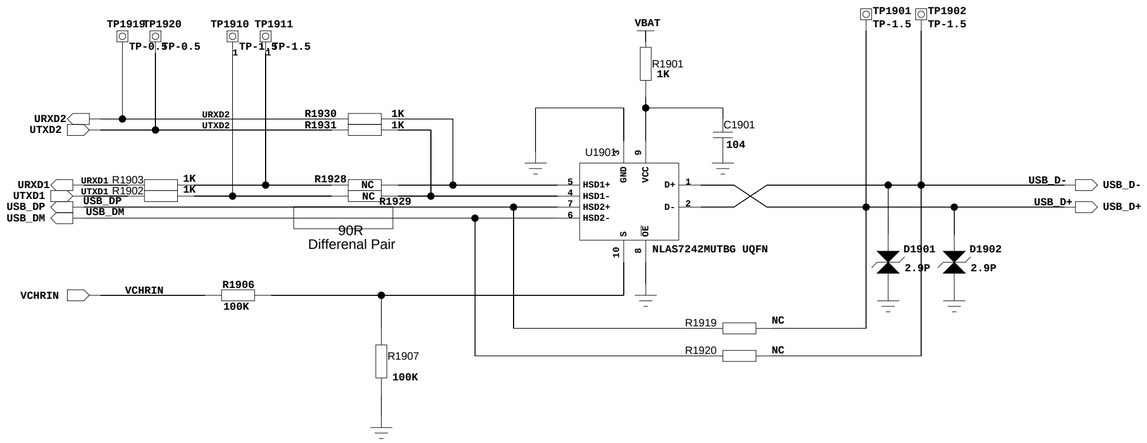

FPC BTB

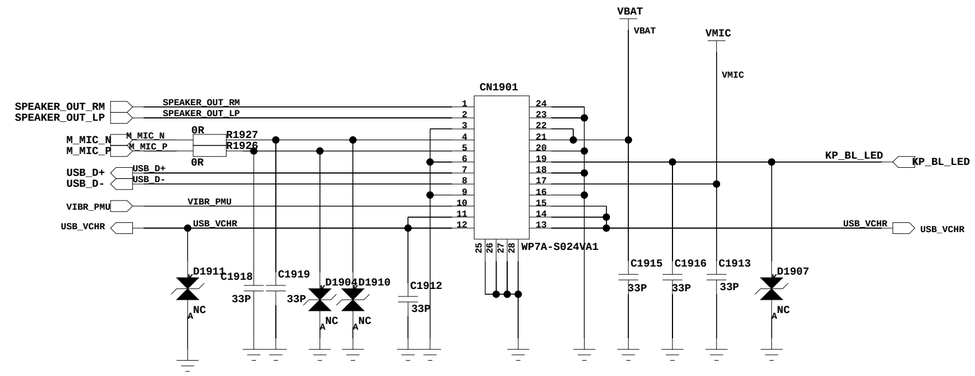

TEST POINT

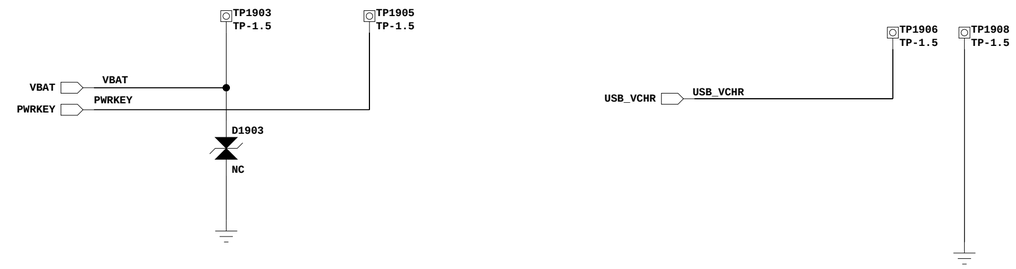

OVP close to USB JACK

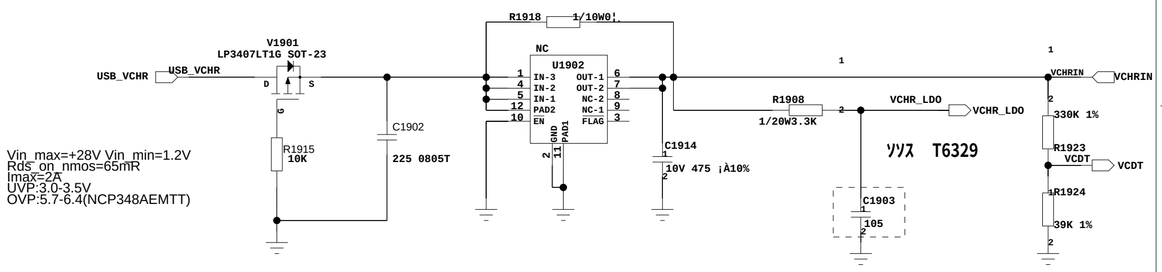

Vin_max=+28V Vin_min=1.2V
Rds_on_nmos=65mR
Imax=2A
UVP:3.0-3.5V
OVP:5.7-6.4(NCP348AEMTT)

Charge

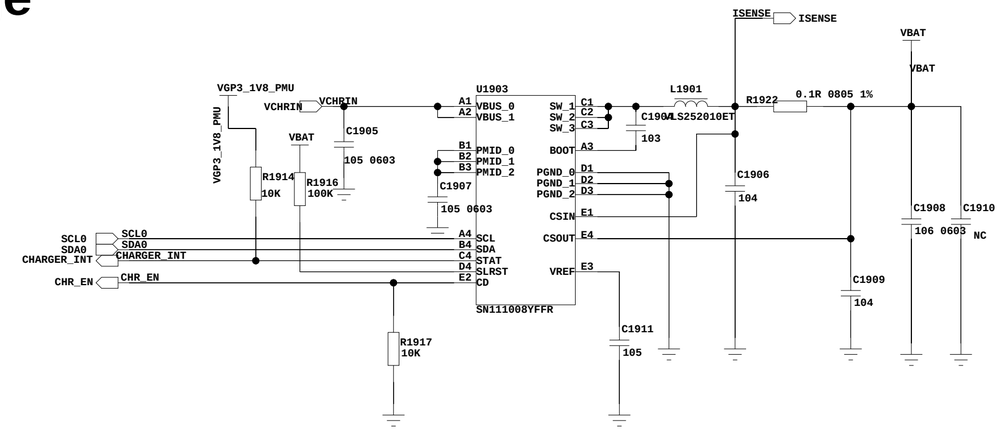

STAT:charge status pin,Pull low when charge is in process
CD=0,Charge is enabled.CD=1,charge is disabled

JTAG²âÊÔµã

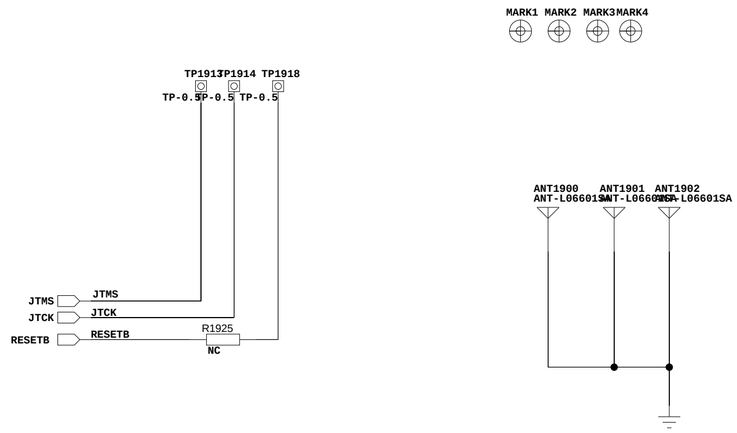

	Sign	Date	Type:
Drawn By			Draw No: 213021-SA
Checked By			Sheet of 12 Ver: 0.0
Standard By			
Approved By			

COB TP & S2202

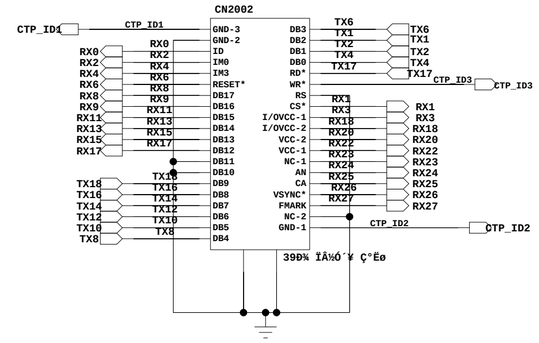

A.L.S.+P.S sensor module & indicator LED

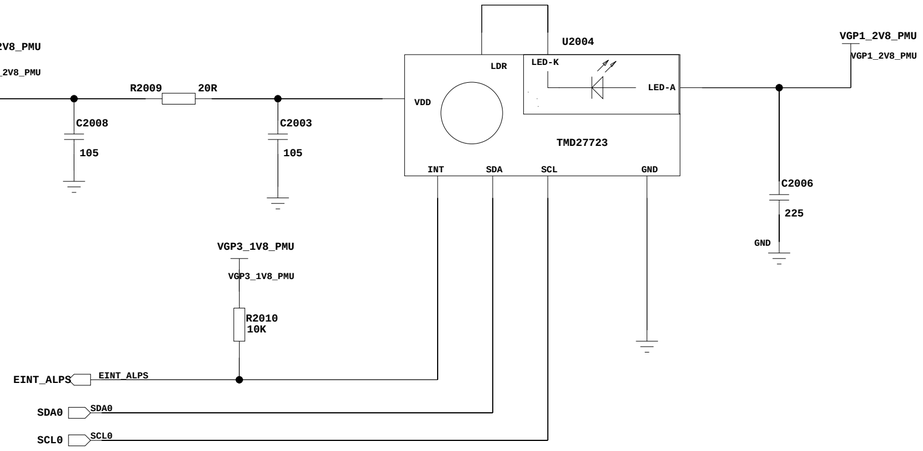

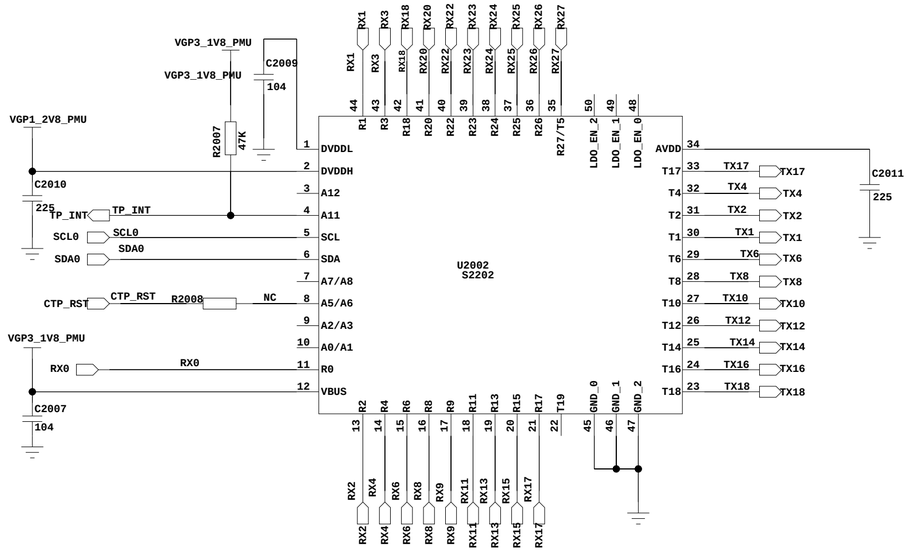

G Sensor

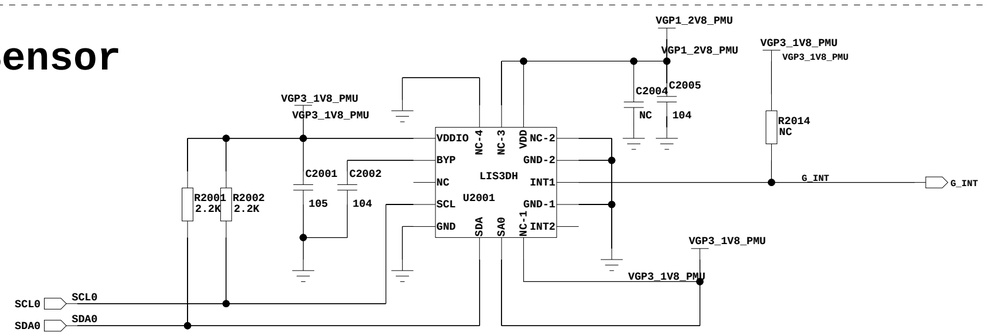

	Sign	Date	Type:
Drawn By			Draw No:213021-SA
Checked By			Sheet of 12 Ver: 0.0
Standard By			oppo
Approved By			

Version	Date	Name	Change Note

	Ç© Ãû	ÈÕ ÆÚ	»ú ÐÍ£º		
Éè ¼Æ	ｻ設ｷｾｻｷ		°å ºÅ£º212039-SB		
Éó ºË	ﾑ堅 ､/ｻｷﾆﾒｽｷｰ		µÚ3 ÕÅ	12 1ÕÅ	°æ´Î£º 0.0
±ê×¼»¯					
Åú ×¼					

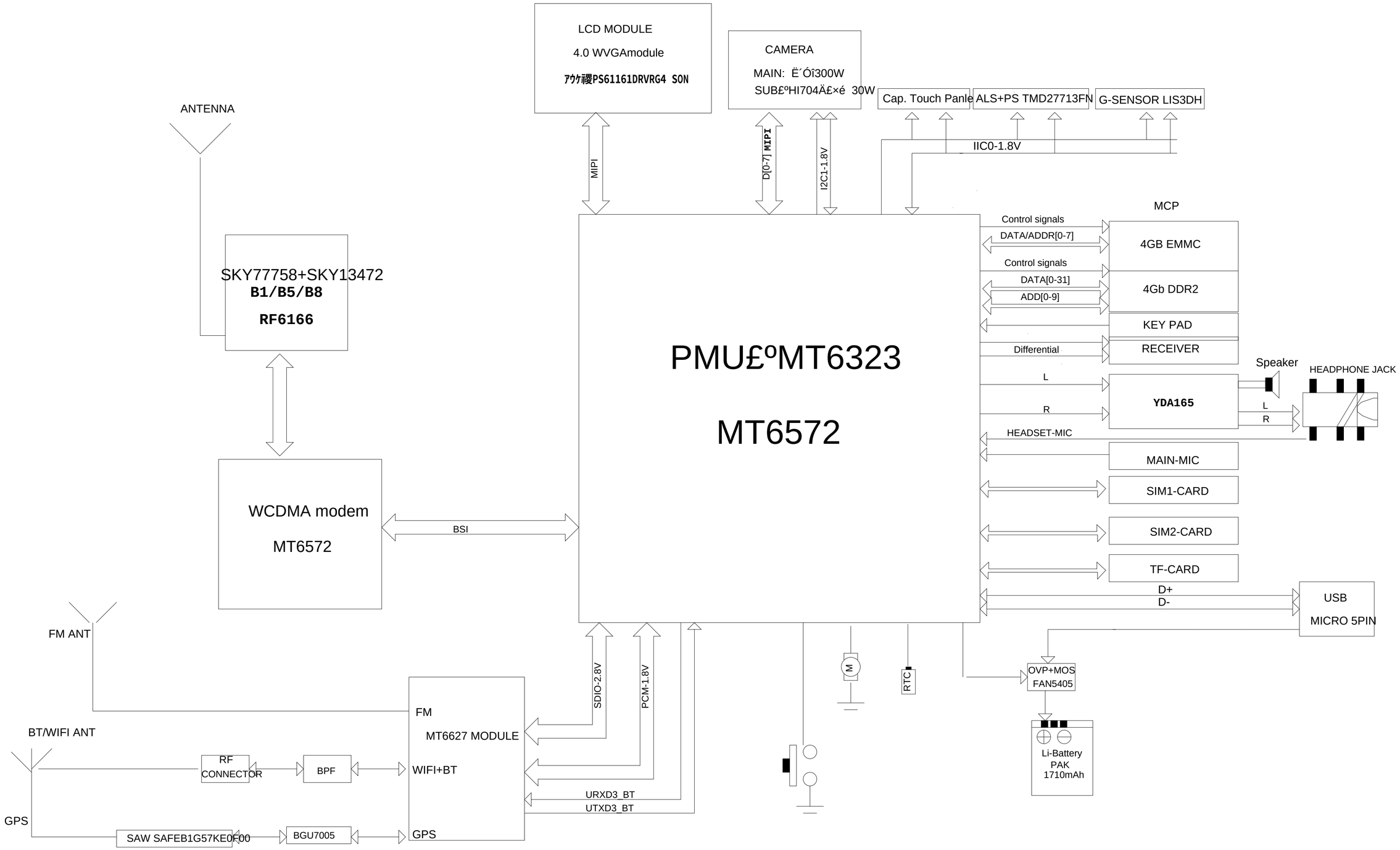

	Ç© Ãû	ÈÕ ÆÚ	»ú ÐÍ£º	
Éè ¼Æ	ｻ鐵ｷｺｷ		°å ºÅ£º 212039-SB	
Éó ºË	ﾑ鑿 ､/ｻｷﾐﾒｶｰ		µÚ2 ÕÅ	12 13 ÕÅ	°æ´Î£º 0.0
±ê×¼»¯			oppo	
Åú ×¼				